LMP 210-211

Maximum working pressure up to 6 MPa (60 bar) - Flow rate up to 365 l/min



INSTALLATION, SERVICE AND MAINTENANCE MANUAL AND SAFETY INSTRUCTIONS

Please scan or click the QR codes to get updated electronic version of the related document.

LMP210 LMP211

For all the QR codes: Scan or click me!

LMP 211

Designation & Ordering code

COMPLETE FILTER

Configuration example: LMP211 | 3 | B | A | D | 6 | A10 | N | P01

Series and size
LMP211

Length
1 | **2** | **3**

Bypass valve
S Without bypass
B With bypass 3.5 bar

Seals and treatments
A NBR
E EPDM
V FPM
C CR

Connections
A G 1”
B G 1 1/4”
C G 1 1/2”
D 1” NPT
E 1 1/4” NPT
F 1 1/2” NPT
G SAE 16 - 1 5/16” - 12 UN
H SAE 20 - 1 5/8” - 12 UN
I SAE 24 - 1 7/8” - 12 UN

Connection for differential pressure indicator
6 With plugged connection

Filtration rating (filter media)

A03	Inorganic microfiber 3 µm	**M25**	Wire mesh 25 µm
A06	Inorganic microfiber 6 µm	**M60**	Wire mesh 60 µm
A10	Inorganic microfiber 10 µm	**M90**	Wire mesh 90 µm
A16	Inorganic microfiber 16 µm	**P10**	Resin impregnated paper 10 µm
A25	Inorganic microfiber 25 µm	**P25**	Resin impregnated paper 25 µm

WA025 Water absorber inorganic microfiber 25 µm

Element Δp
N 20 bar

Execution
P01 MP Filtri standard
Pxx Customized

FILTER ELEMENT

Configuration example: CU210 | 3 | A10 | A | N | P01

Element series and size
CU210

Element length
1 | **2** | **3**

Filtration rating (filter media)

A03	Inorganic microfiber 3 µm	**M25**	Wire mesh 25 µm
A06	Inorganic microfiber 6 µm	**M60**	Wire mesh 60 µm
A10	Inorganic microfiber 10 µm	**M90**	Wire mesh 90 µm
A16	Inorganic microfiber 16 µm	**P10**	Resin impregnated paper 10 µm
A25	Inorganic microfiber 25 µm	**P25**	Resin impregnated paper 25 µm

WA025 Water absorber inorganic microfiber 25 µm

Seals and treatments
A NBR
E EPDM
V FPM
C CR

Element Δp
N 20 bar

Execution
P01 MP Filtri standard
Pxx Customized

CLOGGING INDICATORS

See page 784

DEA Electrical differential pressure indicator
DEM Electrical differential pressure indicator
DEU Electrical differential pressure indicator
DLA Electrical / visual differential pressure indicator
DLE Electrical / visual differential pressure indicator
DTA Electronic differential pressure indicator
DTI I-O Link electronic differential pressure indicator
DVA Visual differential pressure indicator
DVM Visual differential pressure indicator

PLUGS

See page 807

T2 Plug

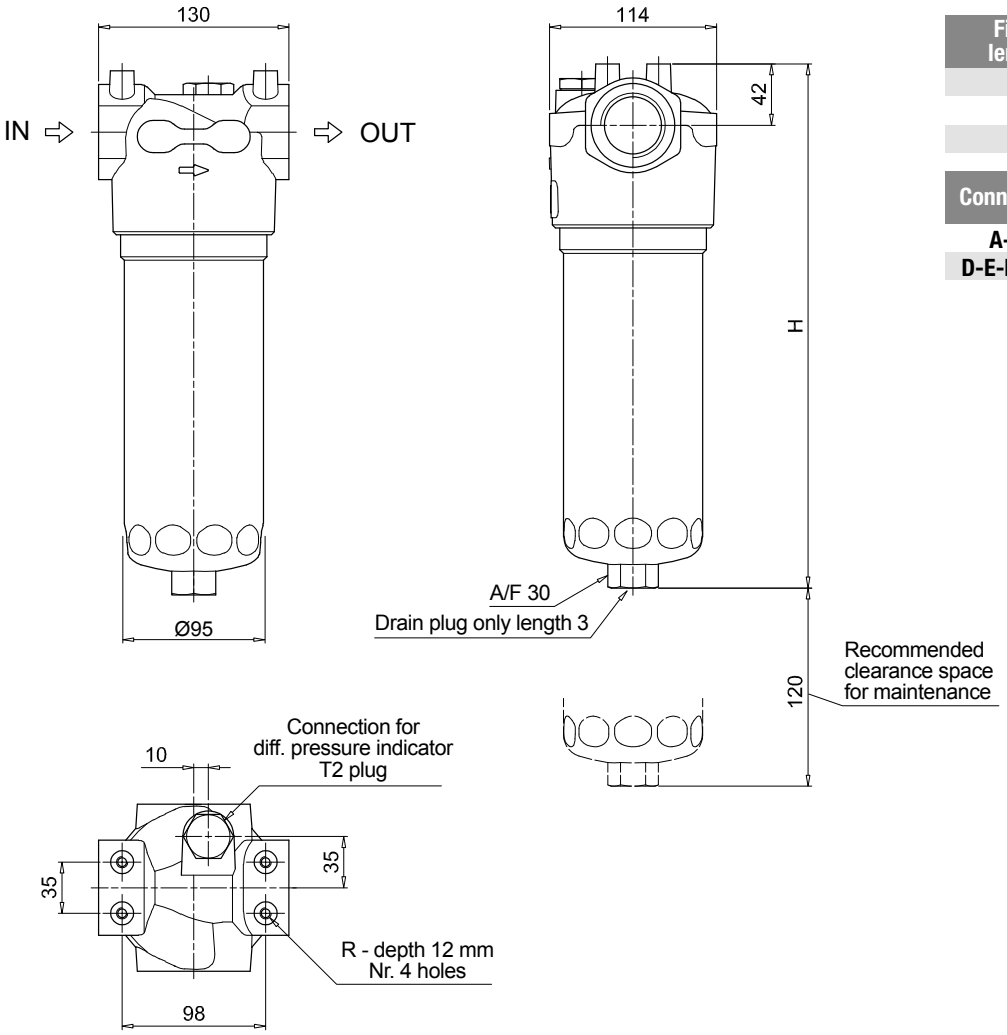

LMP211	
Filter length	**H [mm]**
1	358
2	488
3	629

Connections	**R**
A-B-C	M8
D-E-F-G-H-I	5/16" UNC

LMP 210-211 SPARE PARTS

Order number for spare parts

LMP 210

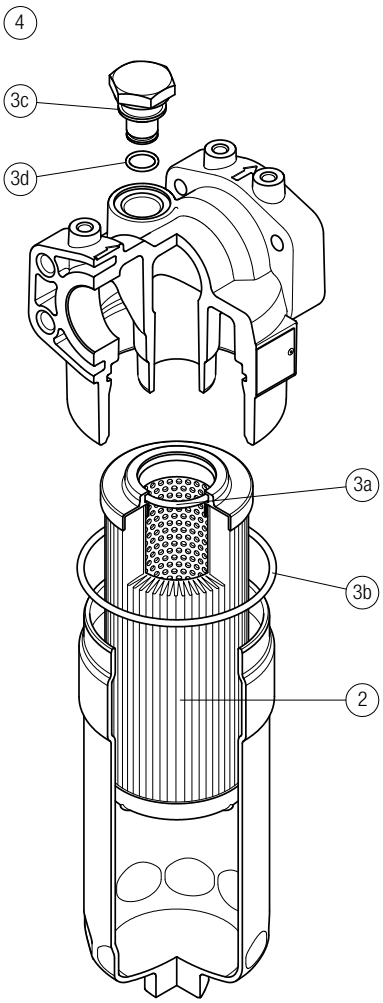

LMP 211

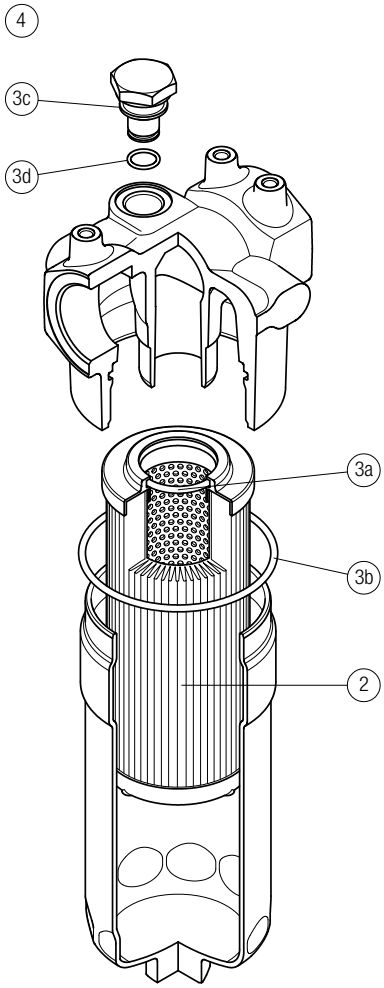

Item:	Q.ty: 1 pc. 2	Q.ty: 1 pc. 3 (3a ÷ 3d)		Q.ty: 1 pc. 4	
Filter series	Filter element	Seal Kit code number NBR	FPM	Indicator connection plug NBR	FPM
LMP 210-211	See order table	02050435	02050436	T2H	T2V