GROUP 2 PUMPS

CONSTRUCTIVE CHARACTERISTICS:

PART	*MATERIAL*	*CHARACTERISTICS*
GEARS	**Hardened steel UNI 7846**	**Rs= 1250 N/mm²** **Rm= 1450 N/mm²**
FLANCE AND COVER	**G25 / G30 cast iron**	**Rs= 300 N/mm²** **Rm= 450 N/mm²**
BEARINGS	**Avional** **Bearings with DU**	**Rs= 350 N/mm²** **Rm= 390 N/mm²**
BODY	**Etruded in aluminium alloy** **Series 7020**	**Rs= 350 N/mm²** **Rm= 390 N/mm²**
O-RINGS	**Buna N** **Viton**	**90 Shore, up to 90°C** **80 Shore, for high temperature**
ANTIEXTRUSION	**Zitel**	**With glass fibres**

Rs= Enervation load
Rm= Breaking load

GENERAL CHARACTERISTICS:

Maximum pressures up to 300 bar.
Weight : from 3.1 Kg to 4.3 kg
Maximum speed up to 4.000 rpm.
Type of shafts: **Taper 1:8 and 1:5**
Oldham
Slined DIN 5482 17x14.
SAE A splined-9 TEETH
SAE A cylindrical - Ø15.85 - SAE A 11 TEETH
Type of flanges: **European standard**
German standard
SAE A standard.

Displacements from 4 cc/rev to 30cc/rev.
The displacements are available according this table:

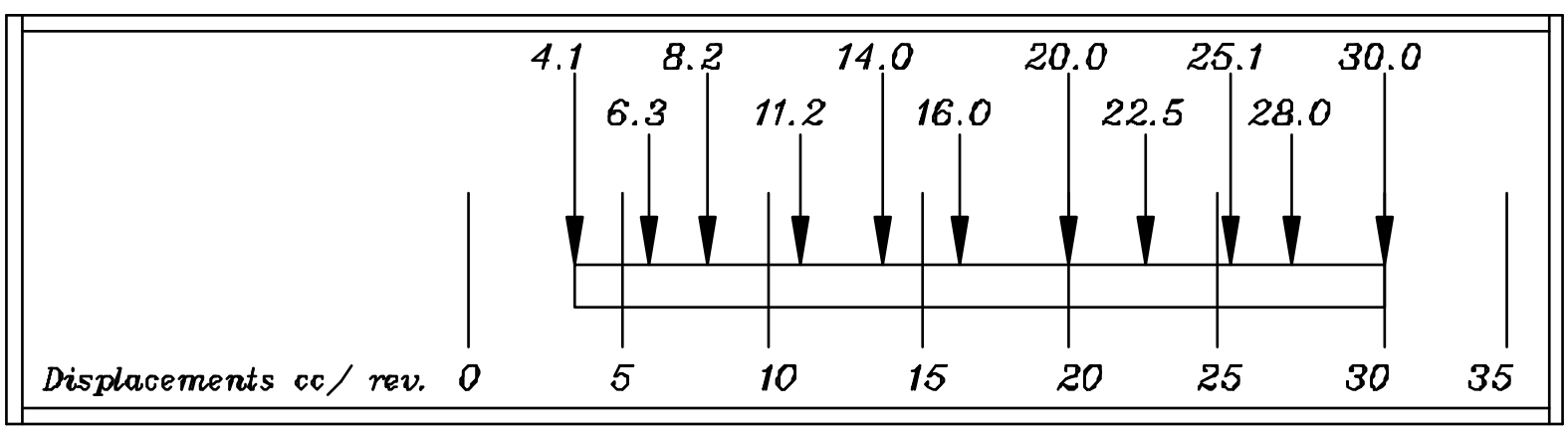

There is also available a special version with built-in support.

DRIVE:

The connection of the pump to the motor must be done preferably with the use of a flexible coupling to avoid any radial and/or axial force on the shaft, otherwise pump efficiency will dramatically drop due to early wear of inner moving parts.
In any applications where the motion is trasmitted through belts, it is necessary to use a support to avoid any radial or axial load to the pump shaft.
In any applications where are used splined shafts ot Oldham couplings, it is suggested to assure a costant lubrification through grease or similar products.

GROUP 2 PUMPS

WORKING CONDITIONS- LIMIT PERFORMANCES

In normal working conditions there must be, in the suction pipe, a pressure lower than the atmospheric pressure.

The pressure range in suction must be:

Min. 0.75 bar (absolute)	MAX 2,0 bar (absolute)

The maximun pressure values "P1" are referred to a continuous working at 1500 rpm with standard hydraulic fluids with minimum viscosity of 10 cSt.
For heavier working conditions (viscosity or high temperature) it is necessary to reduce the "P1" values.

In the following table are described the admitted pressures:

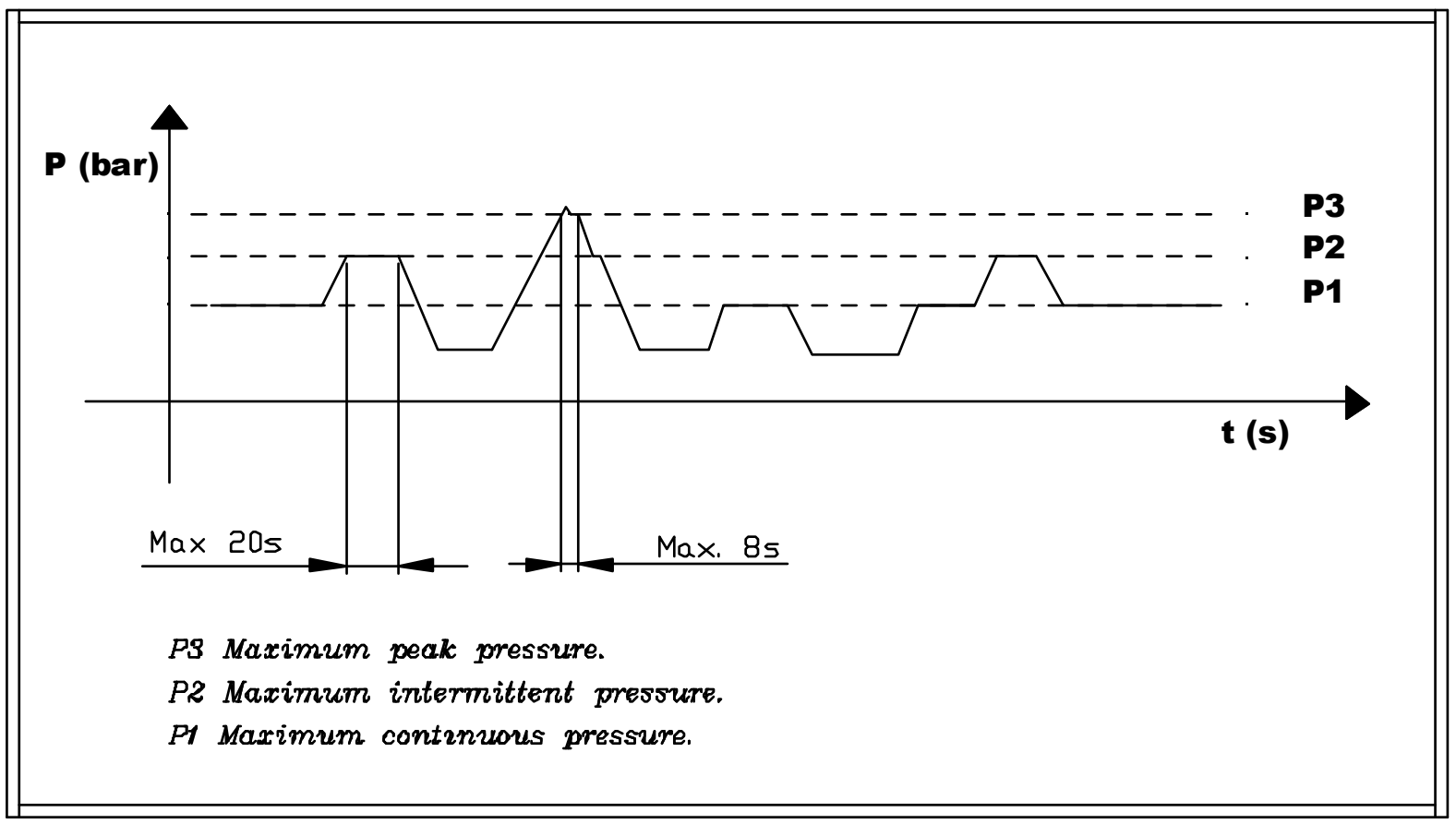

The standard working speeds (minimum and maximum) are the following:

Min. = 400 rpm	Max = (See following table)

DIRECTION OF ROTATION LOOKING AT THE SHAFT:

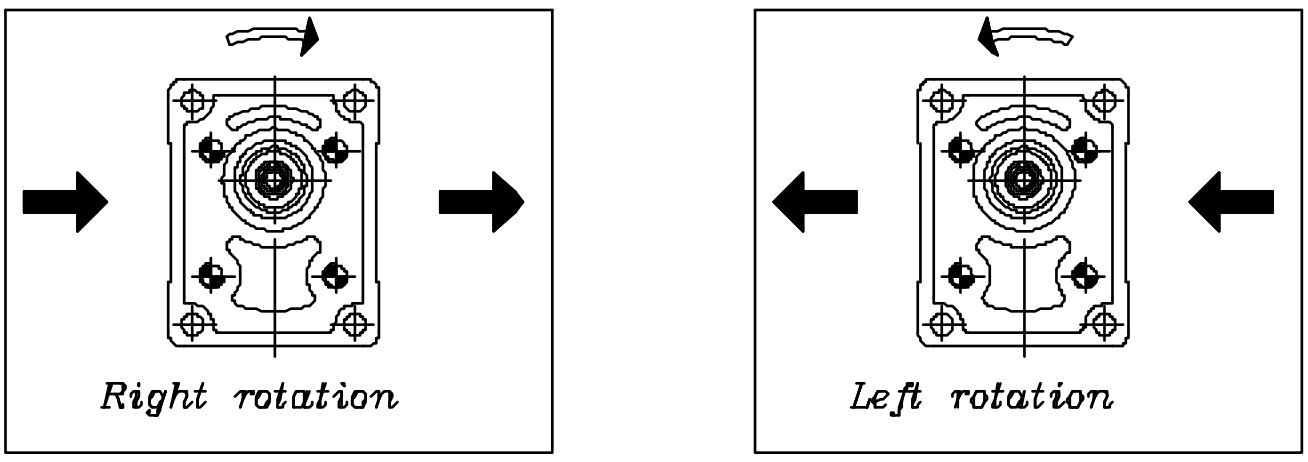

GROUP 2 PUMPS

FLOW CHARACTERISTICS CURVES

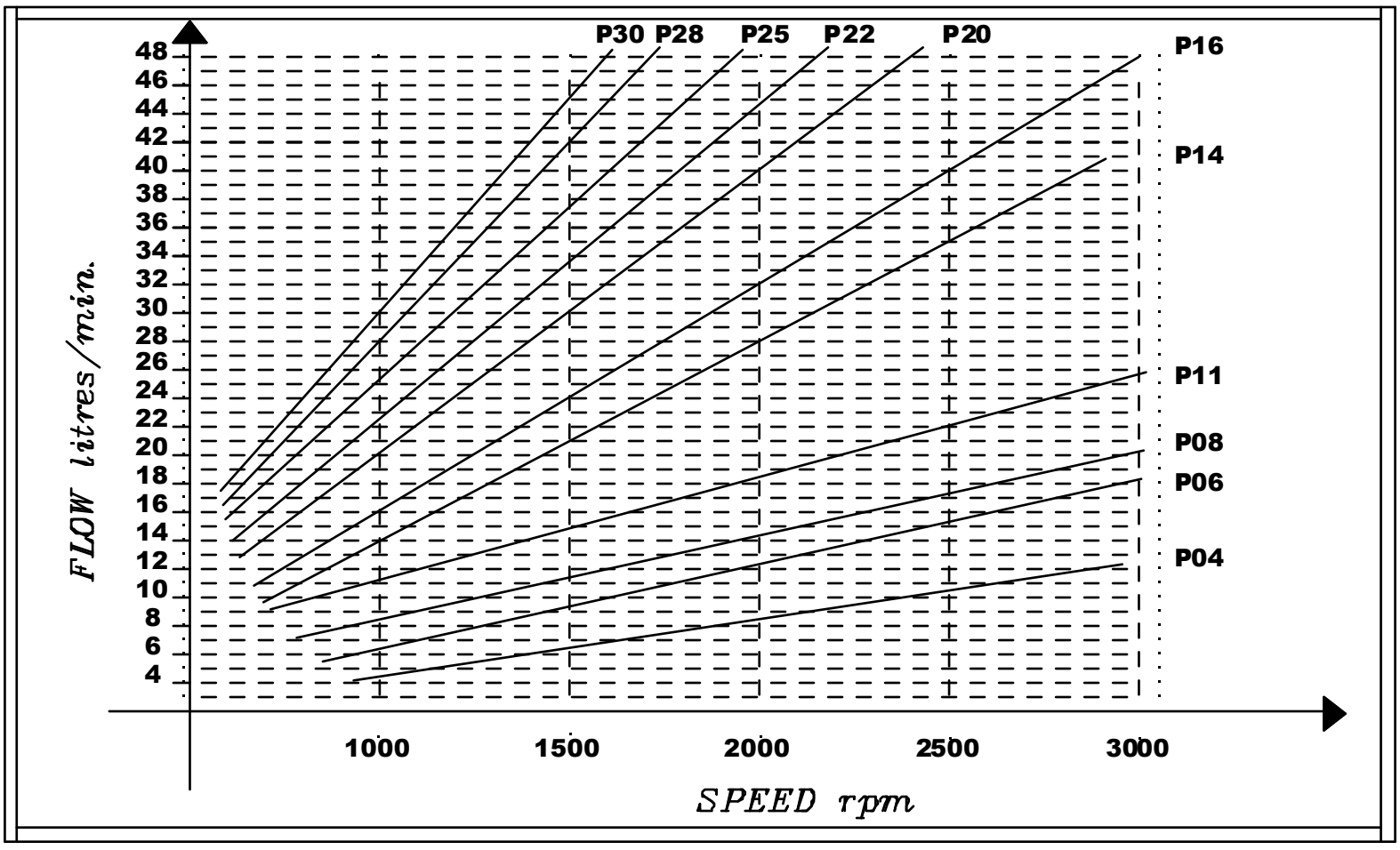

ABSORBED TORQUE

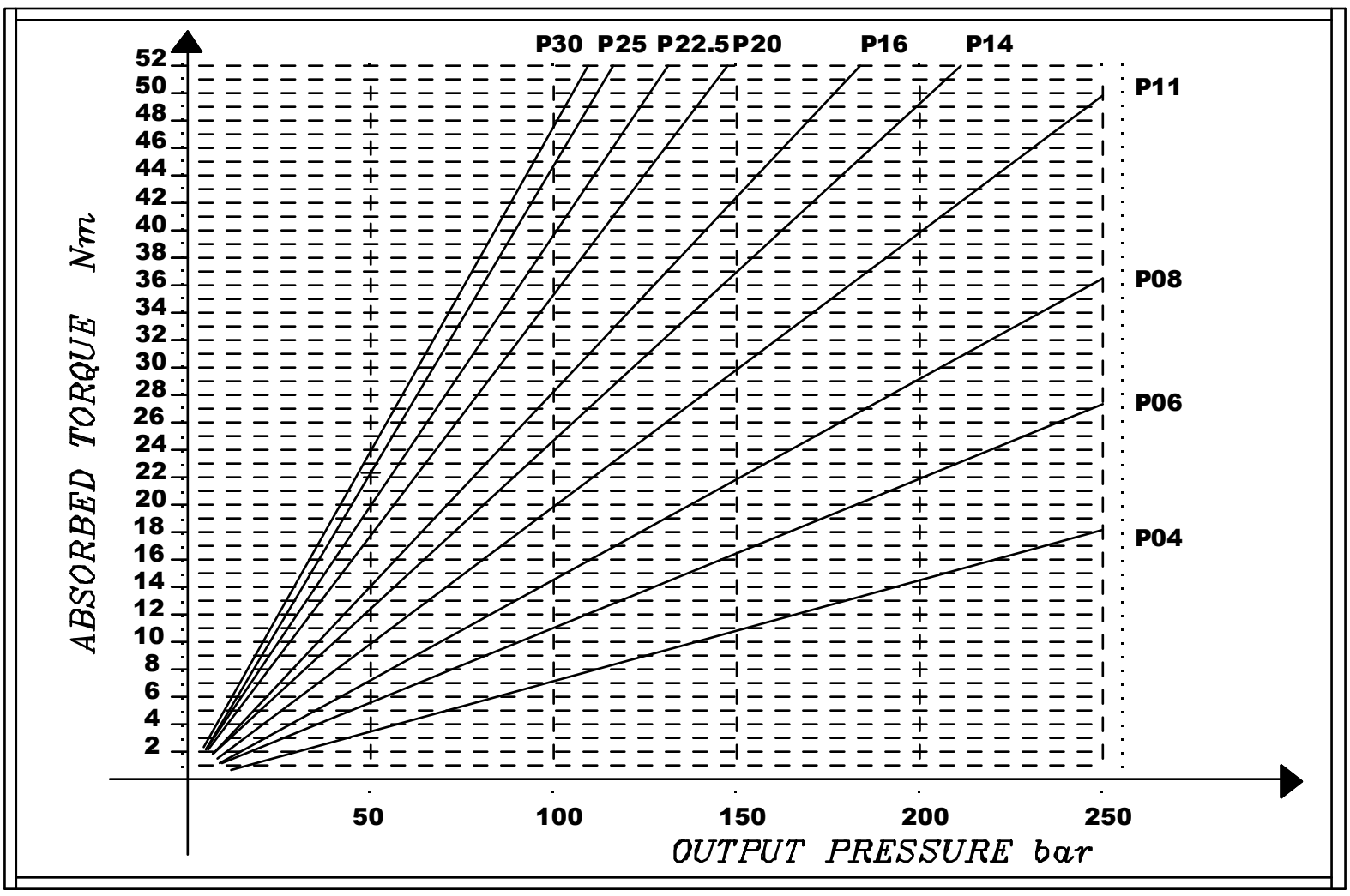

NOTE

Above flow characteristics curves have been made considering a volumetric efficiency of 95%

GROUP 2 PUMPS

PUMP CALCULATION

V	**Displacement**	**cc / rev**
Q	**Flow**	**l/min**
P	**Power**	**kW**
C	**Torque**	**Nm**
N	**Speed**	**rpm**
ΔP	**Pressure**	**bar**
n_v	**Volumetric efficiency**	**0.85**
n_m	**Mechanical efficiency**	**0.9**
n_t	**Total efficiency**	**0.80**

$$Q = V \cdot n_v \cdot N \cdot 10^{-3} \qquad l/min$$

$$C = \frac{\Delta P \cdot V}{62.8 \cdot n_m} \qquad Nm$$

$$P = \frac{\Delta P \cdot V \quad N}{612000 \cdot n_t} \qquad kW$$

GROUP 2 PUMPS- EUROPEAN STANDARD

VERSION: P28 P2

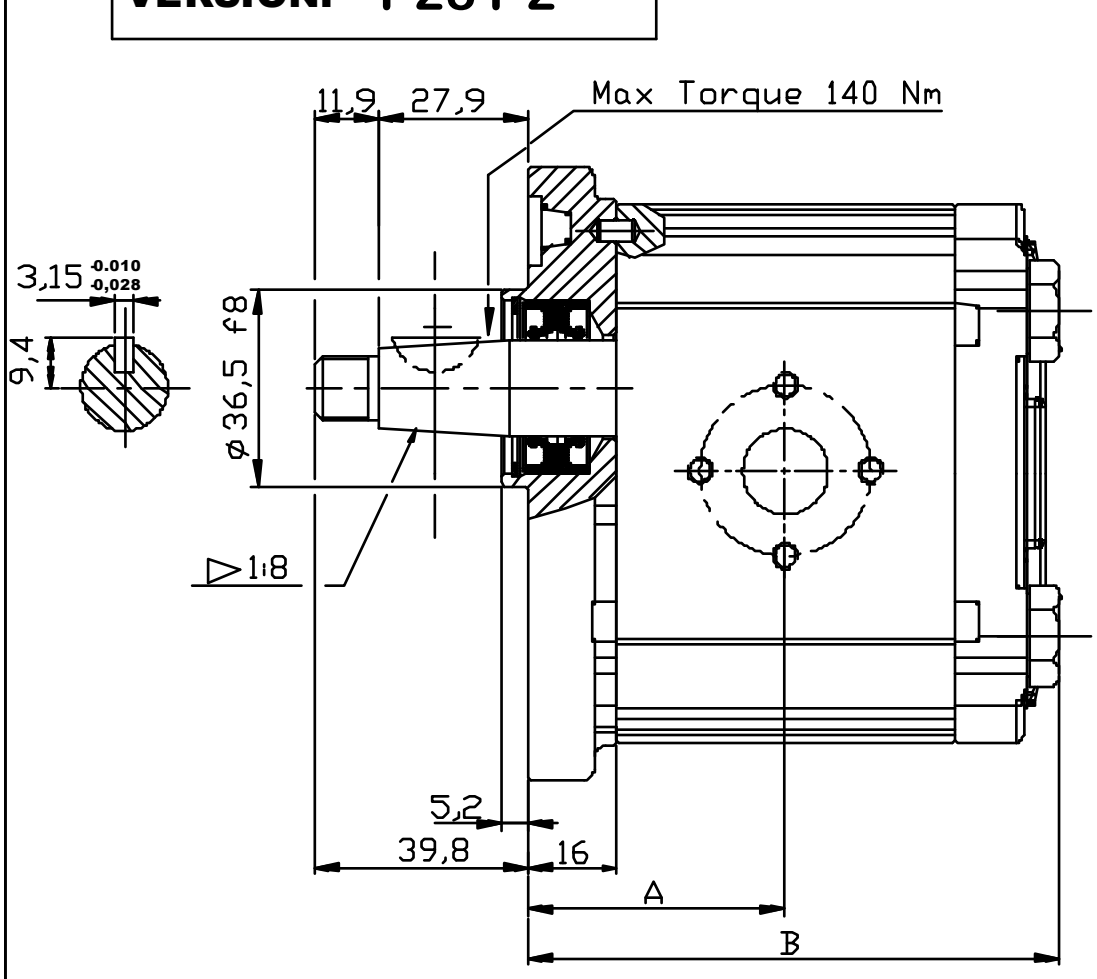

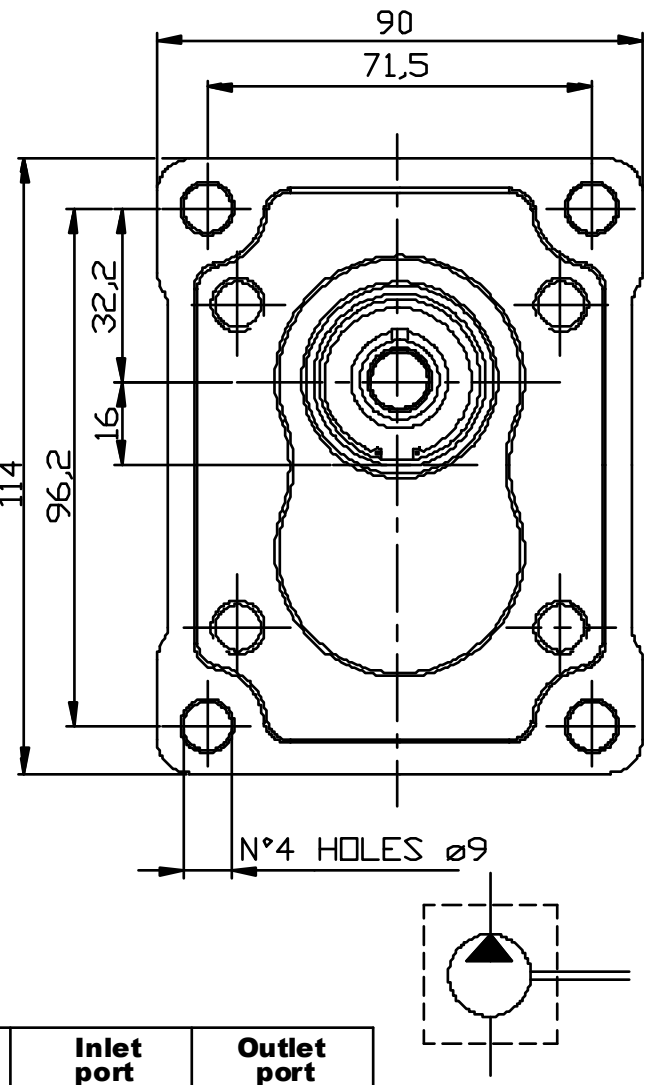

Type	Displacement (cc/rev)	Max working pressure P1 (bar)	Peak pressure P3 (bar)	Max speed (r.p.m)	Dimension A (mm)	Dimension B (mm)	Inlet port ØD	Inlet port ØA	Inlet port W	Outlet port ØD	Outlet port ØA	Outlet port W
OT 200 P04	04,10	250	300	4000	40,00	83,50	13	30	M6	13	30	M6
OT 200 P06	06,20	250	300	3500	41,50	86,50	13	30	M6	13	30	M6
OT 200 P08	08,20	250	300	3500	43,00	89,50	13	30	M6	13	30	M6
OT 200 P11	11,20	250	300	3500	45,15	93,80	13	30	M6	13	30	M6
OT 200 P14	14,00	240	300	3000	47,15	97,80	20	40	M8	13	30	M6
OT 200 P16	16,00	240	300	3000	48,60	100,7	20	40	M8	13	30	M6
OT 200 P20	20,00	200	240	3000	51,50	106,5	20	40	M8	13	30	M6
OT 200 P22	22,50	170	210	2500	57,35	118,2	20	40	M8	13	30	M6
OT 200 P25	25,10	170	210	2500	59,25	122,0	20	40	M8	13	30	M6
OT 200 P28	28,00	140	180	2500	61,35	126,2	20	40	M8	13	30	M6
OT 200 P30	30,00	130	170	2000	62,75	129,0	20	40	M8	13	30	M6

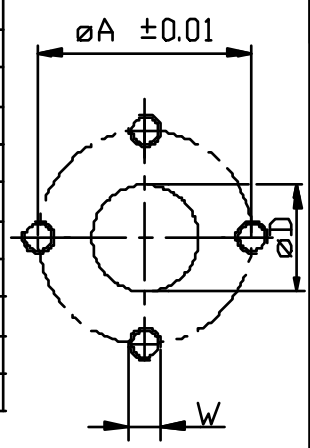

EXAMPLE OF ORDERING CODE

OT200 P 08 S / P 28 P2

- OT200 — Series
- P — Pump
- 08 — Displacement (see above table)
- S — Rotation: S Anti-clockwise; D Clockwise
- P — Body for European flanges
- 28 — Taper shaft (1:8)
- P2 — European standard flange