MPF series

Maximum working pressure up to 800 kPa (8 bar) - Flow rate up to 900 l/min



MPF GENERAL INFORMATION

Description

Return filter

Maximum working pressure up to 800 kPa (8 bar)
Flow rate up to 900 l/min

MPF is a range of return filters for protection of the reservoir against the system contamination.
They are directly fixed to the reservoir, in immersed or semi-immersed position.
The filter output must be always immersed into the fluid to avoid aeration or foam generation into the reservoir.

Available features:

- Female threaded connections up to 2" and flanged connections up to 2", for a maximum flow rate of 750 l/min
- Multiple connections, to connect several return lines or drains
- Fine filtration rating, to get a good cleanliness level into the reservoir
- Bypass valve integrated into the filter element, to relieve excessive pressure drop across the filter media
- 2, 3 or 4 fixing holes for installation, to suit a variety of reservoir surfaces
- O-ring or Flat Seal to suit a variety of reservoir surfaces
- Oil dipstick, to easily check the level of the fluid into the reservoir (sold as separate item)
- Extension tube, to be used in deep reservoirs (sold as separate item)
- Diffuser, to reduce the risk of aeration, foaming and noise (sold as separate item)
- Filler plug, to fill cleaned fluid into the tank without an additional connection
- Visual, electrical and electronic clogging indicators

Common applications:

- Light industrial equipment
- Mobile application

Technical data

Filter housing materials

- Head: Aluminium

- Cover
  Nylon: MPF 020-030-100-104-110
  Aluminium: MPF 181-182-184-191-192-194-400-410-450-451-750

- Bowl: Nylon

Bypass valve

- Opening pressure 175 kPa (1.75 bar) ±10%
- Opening pressure 300 kPa (3 bar) ±10%

Δp element type

- Microfibre filter elements - series H: 10 bar
- Fluid flow through the filter element from OUT to IN

Seals

- Standard NBR series A
- Optional FPM series V

Temperature

From -25 °C to +110 °C

Note

MPF filters are provided for vertical mounting



Weights [kg] and volumes [dm³]

Filter series	Weights [kg]					Volumes [dm³]				
	Length	1	2	3	4	Length	1	2	3	4
MPF 020		0.30	-	-	-		0.26	-	-	-
MPF 030		0.40	-	-	-		0.29	-	-	-
MPF 100		0.61	0.64	0.67	0.74		0.64	0.85	1.20	1.65
MPF 104		0.82	0.96	1.02	1.25		0.64	0.85	1.20	1.65
MPF 110		0.64	0.68	0.71	0.78		-	-	-	-
MPF 181		2.20	3.00	-	-		2.50	4.00	-	-
MPF 182		2.30	3.10	-	-		2.50	4.00	-	-
MPF 184		2.55	3.45	-	-		2.65	4.45	-	-
MPF 191		-	3.00	-	-		-	4.25	-	-
MPF 192		-	3.10	-	-		-	4.25	-	-
MPF 194		-	3.45	-	-		-	4.45	-	-
MPF 400		3.35	3.65	3.90	-		3.70	4.60	5.40	-
MPF 410		3.55	3.85	4.10	-		3.70	4.60	5.40	-
MPF 450-451		3.95	4.25	4.50	-		3.70	4.60	5.40	-
MPF 750		6.30	-	-	-		8.45	-	-	-

FILTER ASSEMBLY SIZING
Flow rates [l/min]

Filter series	Length	Filter element design - H series					Filter element design - N series		
		A03	A06	A10	A16	A25	M25 M60 M90	P10	P25
MPF 020	**1**	7	10	23	28	42	59	51	54
MPF 030	**1**	7	10	24	29	47	84	60	66
MPF 100-104-110	**1**	18	20	53	56	65	153	87	96
	2	28	38	65	75	95	158	111	123
	3	48	55	125	135	169	289	224	251
	4	79	89	180	185	198	306	264	289
MPF 181-182-184	**1**	127	148	235	243	278	441	285	299
	2	231	262	358	382	388	472	404	412
MPF 191-192-194	**2**	261	305	489	528	546	696	583	598
MPF 400	**1**	150	171	294	304	350	585	370	390
	2	237	252	454	462	589	868	619	645
	3	248	288	553	609	621	885	680	703
MPF 410	**1**	146	167	277	285	325	512	341	357
	2	226	239	396	402	485	644	503	519
	3	236	269	462	497	505	653	539	553
MPF 450-451	**1**	150	171	294	304	350	585	370	390
	2	237	252	454	462	589	868	619	645
	3	248	288	553	609	621	885	680	703
MPF 750	**1**	392	465	623	700	769	929	804	819

Maximum flow rate for a complete return filter with a pressure drop Δp = 0.5 bar.
The reference fluid has a kinematic viscosity of 30 mm^2/s (cSt) and a density of 0.86 kg/dm^3.
For different pressure drop or fluid viscosity we recommend to use our selection software available on www.mpfiltri.com.
You can also calculate the right size using the formulas present on the FILTER SIZING paragraph at the beginning of the full catalogue or at the beginning of the filter family brochure.
Please, contact our Sales Department for further additional information.

Hydraulic symbols

Filter series	Style 1 connection	Style 2 connections
MPF 020	•	
MPF 030	•	
MPF 100	•	
MPF 104	•	
MPF 110		•
MPF 181	•	
MPF 182		•
MPF 184	•	•
MPF 191	•	
MPF 192	•	
MPF 194	•	•
MPF 400	•	
MPF 410		•
MPF 450	•	
MPF 451		•
MPF 750	•	

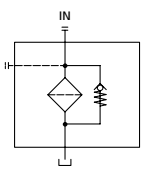

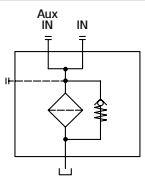

Pressure drop

Filter housings Δp pressure drop

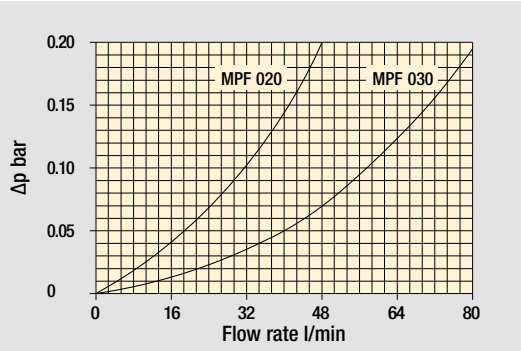

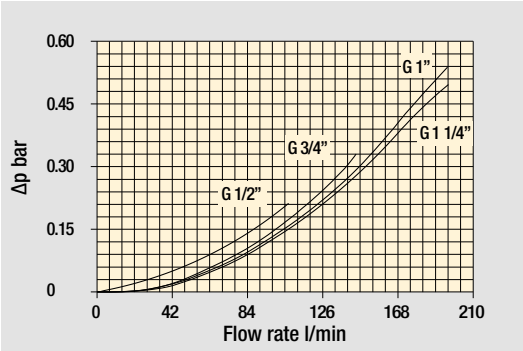

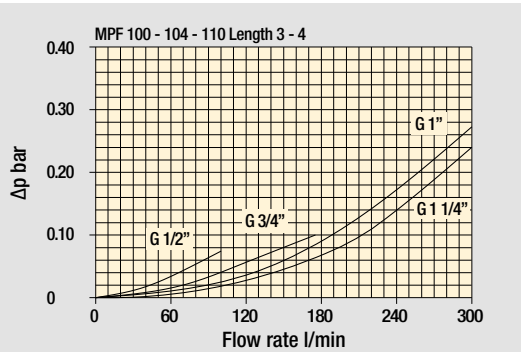

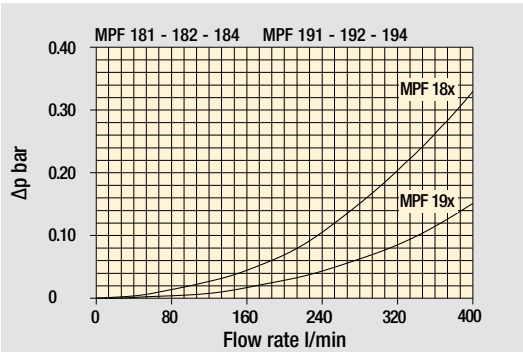

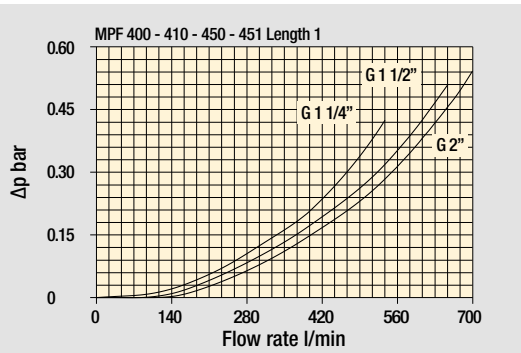

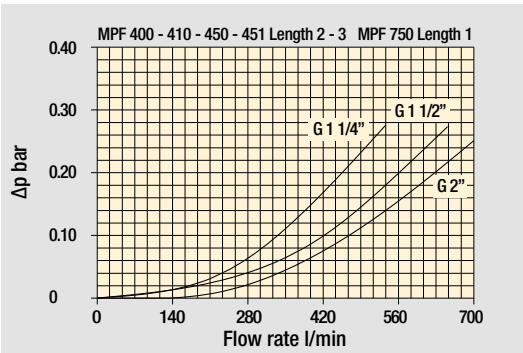

Bypass valve pressure drop

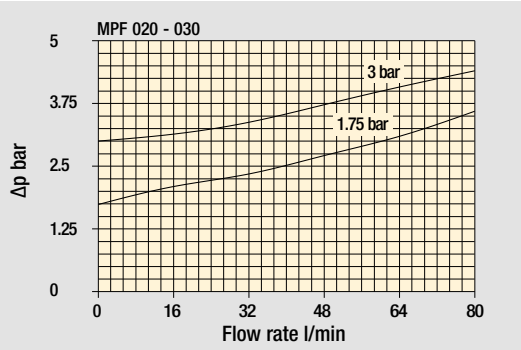

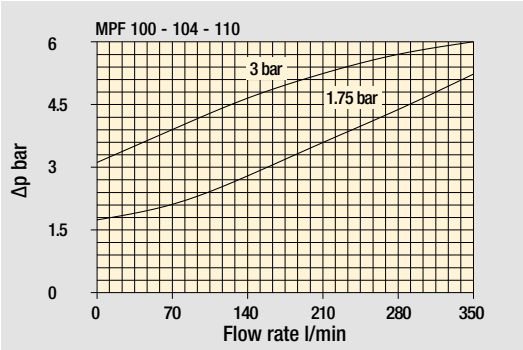

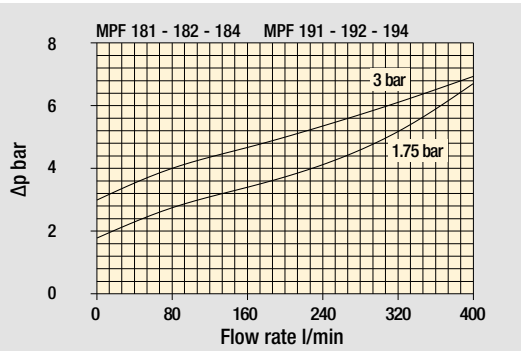

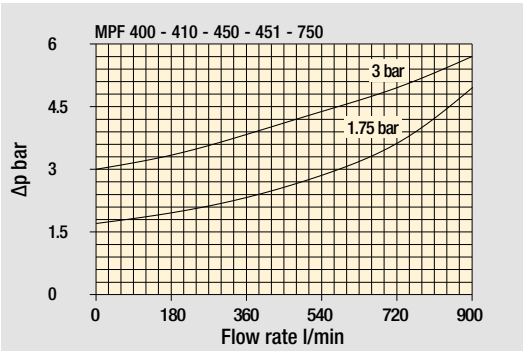

The curves are plotted using mineral oil with density of 0.86 kg/dm³ in compliance with ISO 3968. Δp varies proportionally with density.

Standard - Single IN port



Double IN port
Option: double indicator port

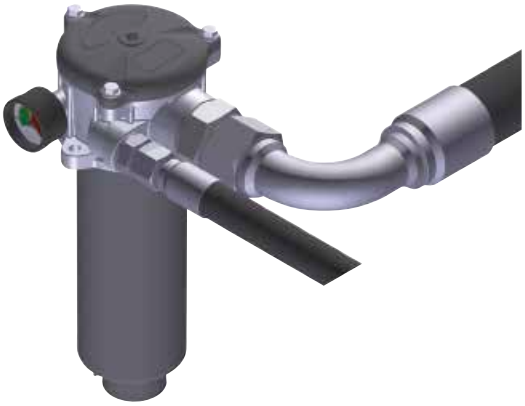

Double IN port - Drain port
Option: indicator port

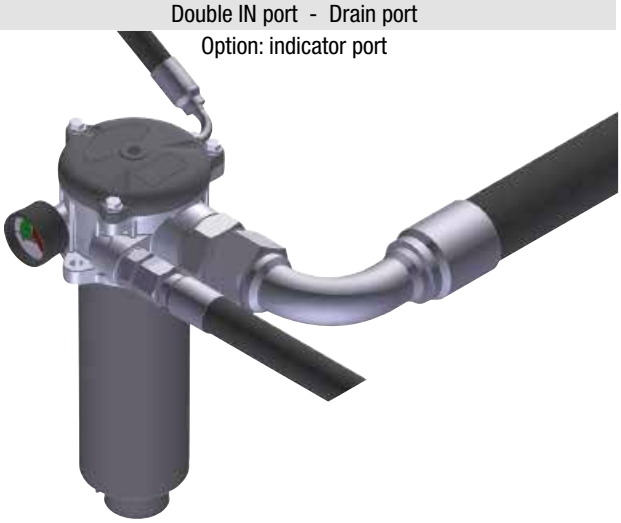

Double IN port - Double drain port

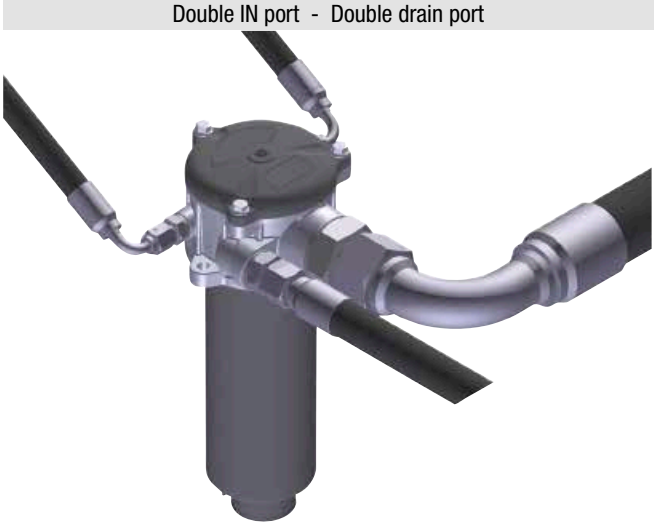

Designation & Ordering code

COMPLETE FILTER

Configuration example 1:	MPF100	2	W	G3	A06	W	B	P01
Configuration example 2:	MPF104	4	A	G8	P10	N	E	P01

Series and size

MPF100 | **MPF104** Filter element with standard spigot

Length

1 | **2** | **3** | **4** |

Seals and treatments

A	NBR
V	FPM
W	NBR head anodized
Z	FPM head anodized

Connections	Size 100	Size 104
G1 G 1/2”	•	•
G2 G 3/4”	•	•
G3 G 1”	•	•
G4 1/2” NPT	•	•
G5 3/4” NPT	•	•
G6 1” NPT	•	•

Connections	Size 100	Size 104
G7 SAE 8 - 3/4” - 16 UNF	•	•
G8 SAE 12 - 1 1/16” - 12 UN	•	•
G9 SAE 16 - 1 5/16” - 12 UN	•	•

Filtration rating (filter media)

A03	Inorganic microfiber 3 µm	**M25**	Wire mesh 25 µm
A06	Inorganic microfiber 6 µm	**M60**	Wire mesh 60 µm
A10	Inorganic microfiber 10 µm	**M90**	Wire mesh 90 µm
A16	Inorganic microfiber 16 µm	**P10**	Resin impregnated paper 10 µm
A25	Inorganic microfiber 25 µm	**P25**	Resin impregnated paper 25 µm

Element Δp	Filter media Axx	Mxx	Pxx
N 10 bar		•	•
H 10 bar	•		
W 10 bar, compatible with fluids HFA, HFB and HFC	•	•	

Bypass valve

E	3 bar
B	1.75 bar

Execution

P01	MP Filtri standard
Pxx	Customized

FILTER ELEMENT

Configuration example 1:	MF100	2	A06	W	B		P01
Configuration example 2:	MF100	4	P10	N	B	E	P01

Element series and size

MF100 Filter element with standard spigot

Element length

1 | **2** | **3** | **4** |

Filtration rating (filter media)

A03	Inorganic microfiber 3 µm	**M25**	Wire mesh 25 µm
A06	Inorganic microfiber 6 µm	**M60**	Wire mesh 60 µm
A10	Inorganic microfiber 10 µm	**M90**	Wire mesh 90 µm
A16	Inorganic microfiber 16 µm	**P10**	Resin impregnated paper 10 µm
A25	Inorganic microfiber 25 µm	**P25**	Resin impregnated paper 25 µm

Element Δp	Filter media Axx	Mxx	Pxx
N 10 bar		•	•
H 10 bar	•		
W 10 bar, compatible with fluids HFA, HFB and HFC	•	•	

Seals

B	NBR
V	FPM

Bypass valve

E	3 bar
	1.75 bar

Execution

P01	MP Filtri standard
Pxx	Customized

ACCESSORIES

Indicators	page
BVA Axial pressure gauge	240
BVR Radial pressure gauge	240
BVP Visual pressure indicator with automatic reset	241
BVQ Visual pressure indicator with manual reset	241
BEA Electrical pressure indicator	239
BEM Electrical pressure indicator	239
BLA Electrical / visual pressure indicator	239-240

Additional features	page
TE Extension tube	248
DFS Diffuser with fast lock connection	249
T5 Filler plug M30x1.5	249
DPT Dipstick	249

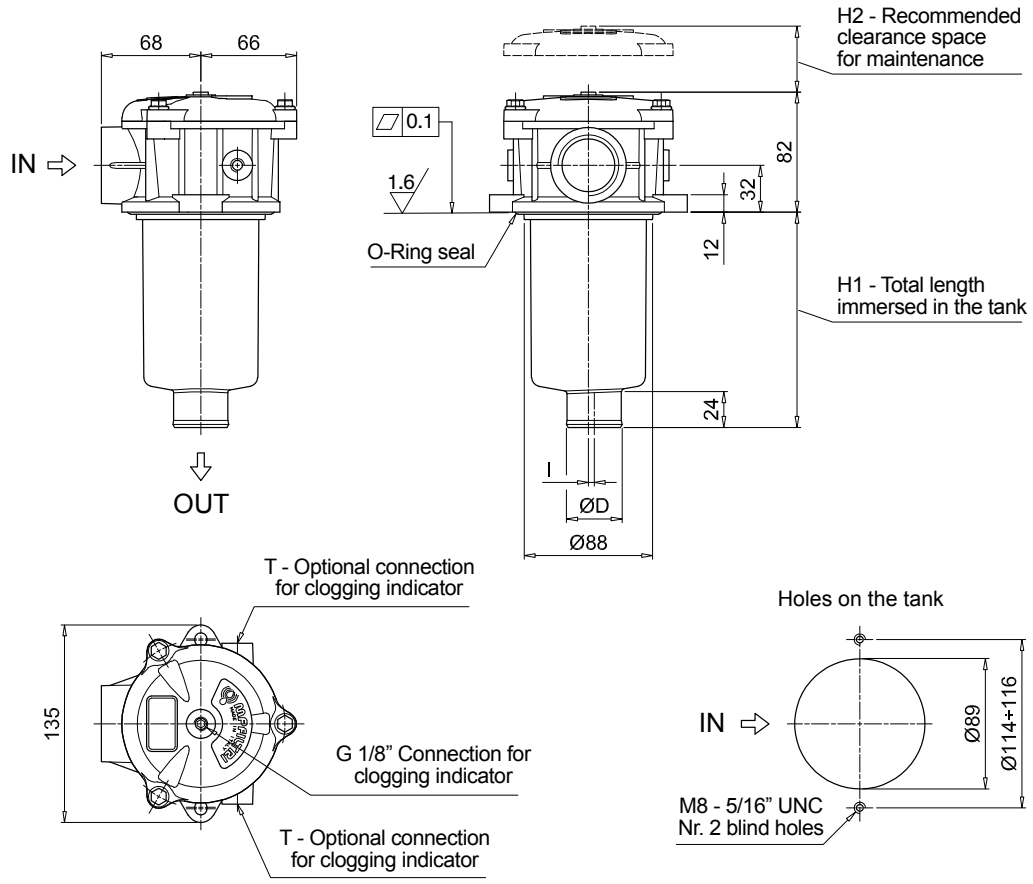

MPF100

Filter length	H1 [mm]	H2 [mm]	D [mm]	l [mm]
1	100	120	38	4
2	147	170	38	4
3	225	250	47	-
4	327	350	47	2.5

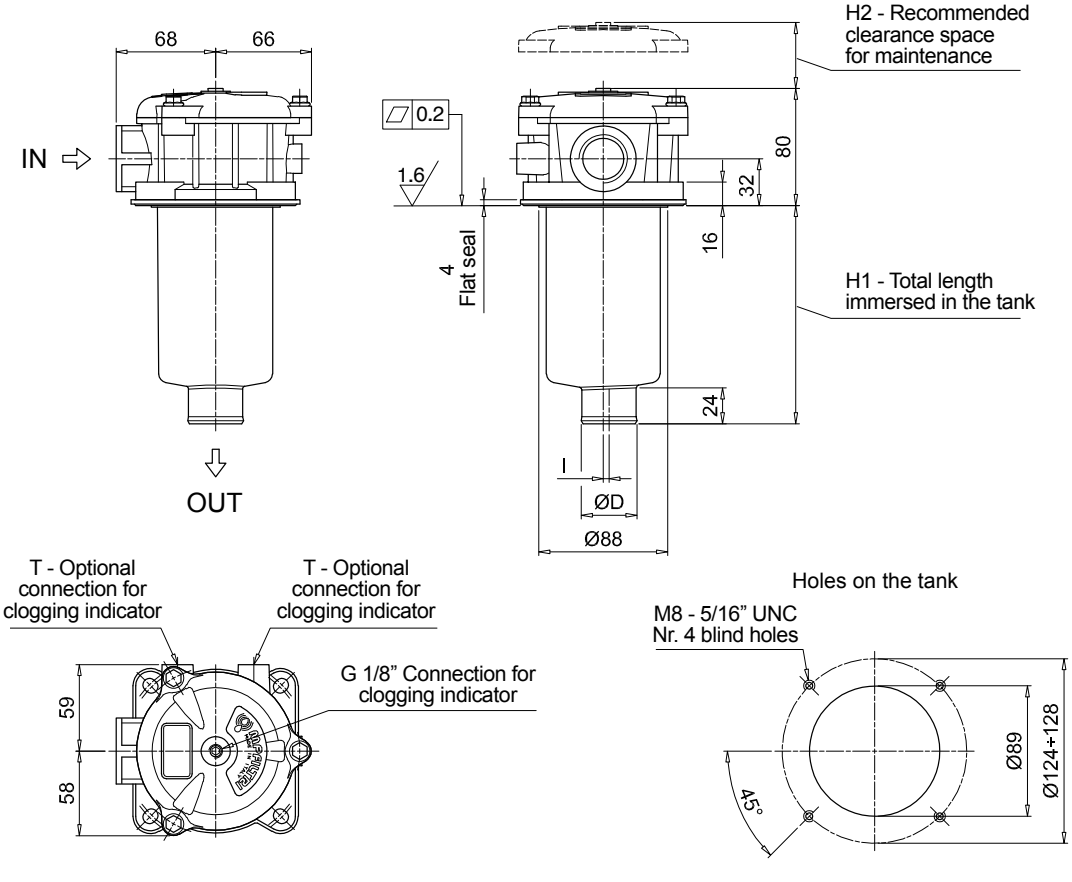

MPF104

Filter length	H1 [mm]	H2 [mm]	D [mm]	l [mm]
1	98	120	38	4
2	145	170	38	4
3	223	250	47	-
4	325	350	47	2.5

MPF 100

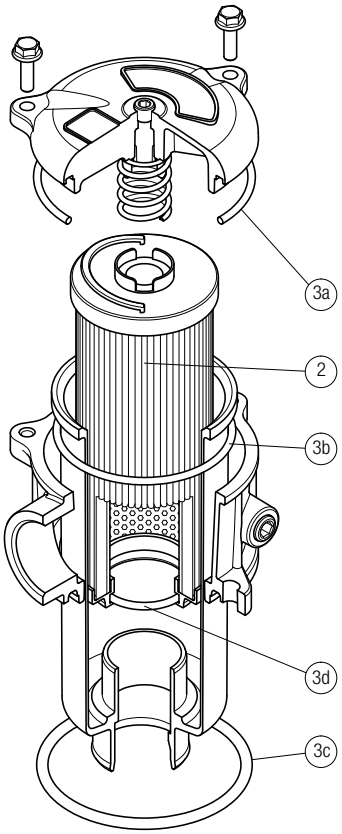

MPF 181

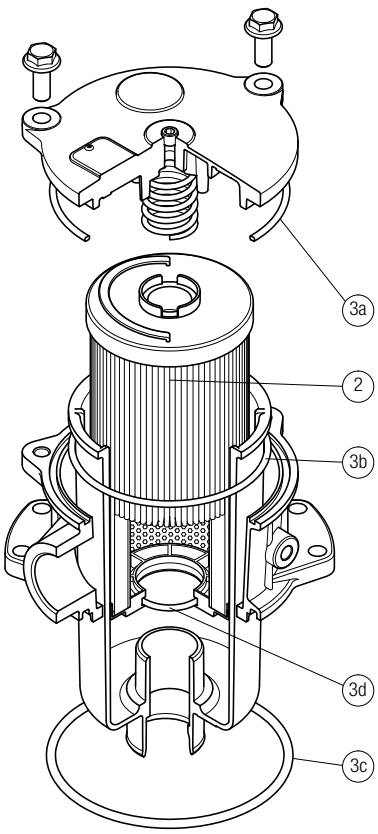

O-RING SEAL

Item:	Q.ty: 1 pc. 2	Q.ty: 1 pc. 3 (3a ÷ 3d)	
Filter series	Filter element	Seal Kit code number NBR	FPM
MPF 030	See order table	02050055	02050056
MPF 100-110		02050057	02050058
MPF 181-182		02050059	02050060
MPF 184		02050455	02050456
MPF 191-192		02050457	02050458
MPF 194		02050459	02050460
MPF 400-410		02050061	02050062
MPF 450-451		02050461	02050462
MPF 750		02050106	02050107

MPF 104

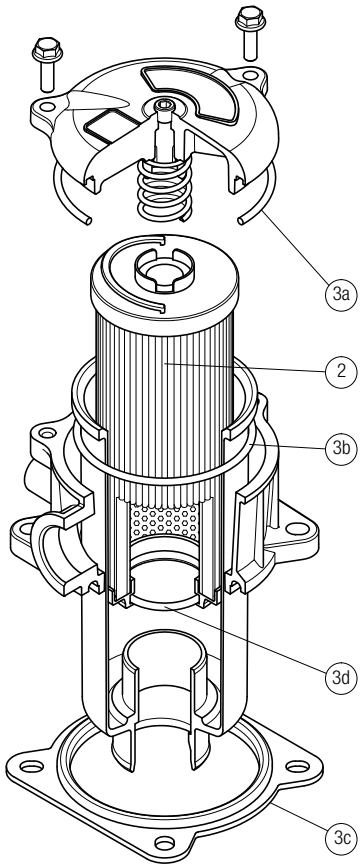

MPF 181

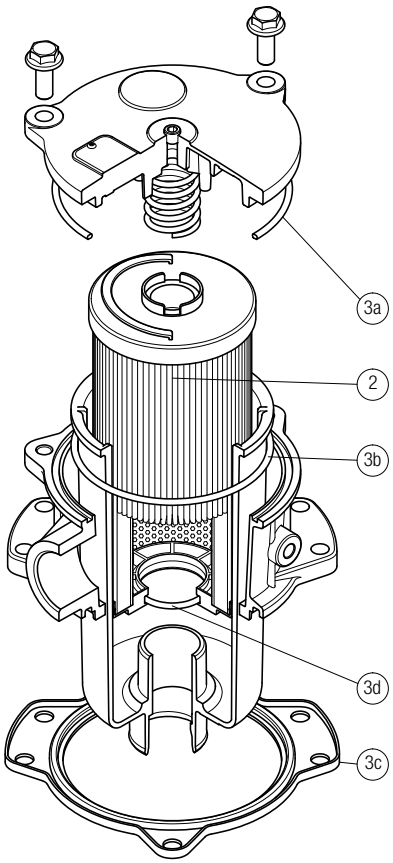

FLAT SEAL

Item:	Q.ty: 1 pc. 2	Q.ty: 1 pc. 3 (3a ÷ 3d)	
Filter series	Filter element	Seal Kit code number NBR	FPM
MPF 020	See order table	02050438	02050439
MPF 104		02050350	02050408
MPF 181-182		02050659	02050660
MPF 191-192		02050661	02050662