HYDRAULIC MOTORS MS



APPLICATION

» Conveyors
» Metal working machines
» Agricultural machines
» Road building machines
» Mining machinery
» Food industries
» Special vehicles etc.

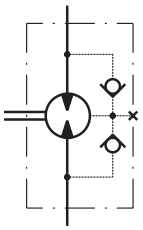

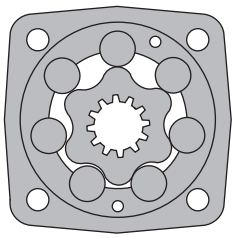

CONTENTS

Specification data ..... 5÷6
Function diagrams ..... 7÷12
Dimensions and mounting .....13÷16
Tacho connection 16
Permissible Shaft Seal pressure.....16
Shaft extensions 17
Motor with Drum brake- MSB 18
Permissible shaft loads 19
Function diagram for MSB 19
Dimensions and mounting- MSS, V, U ..... 20÷23
Internal Spline data 23
Order code 24

OPTIONS

» Model - Disc valve, roll-gerotor
» Flange and wheel mount
» Short motor
» Motor with Drum Brake
» Tacho connection
» Speed sensoring
» Side and rear ports
» Shafts - straight, splined and tapered
» Metric, BSPP and SAE ports
» Other special features

GENERAL

Max. Displacement, cm^3/rev [in^3/rev]	564,9 [34.47]
Max. Speed, [RPM]	1000
Max. Torque, daNm [lb-in]	cont.: 85 [7520] int.: 99 [8760]
Max. Output, kW [HP]	23 [30.8]
Max. Pressure Drop, bar [PSI]	cont.: 210 [3050] int.: 275 [3990]
Max. Oil Flow, lpm [GPM]	90 [24]
Min. Speed, [RPM]	5
Permissible Shaft Loads, daN [lbs]	P_a=500 [1125]
Pressure fluid	Mineral based- HLP(DIN 51524) or HM(ISO 6743/4)
Temperature range, ^oC [^oF]	-40÷140 [-40÷284]
Optimal Viscosity range, mm^2/s [SUS]	20÷75 [98÷347]
Filtration	ISO code: 18/16/13 According to ISO 4406-1999

Oil flow in drain line

Pressure drop bar [PSI]	Viscosity mm^2/s [SUS]	Oil flow in drain line lpm [GPM]
140 [2030]	20 [98]	1,5 [.396]
	35 [164]	1 [.264]
210 [3045]	20 [98]	3 [.793]
	35 [164]	2 [.528]

Pressure Losses

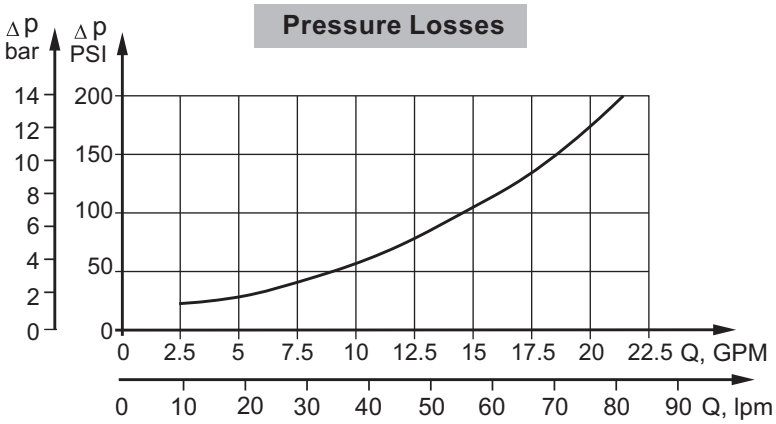

SPECIFICATION DATA

Type		MS 80	MS 100	MS 125	MS 160	MS 200
Displacement, cm³/rev [in³/rev]		80,5 [4.91]	100 [6.1]	125,7 [7.67]	159,7 [9.74]	200 [12.2]
Max. Speed,	Cont.	810	750	600	470	375
[RPM]	Int.*	1000	900	720	560	450
Max. Torque	Cont.	24 [2120]	30,5 [2700]	37,5 [3320]	49 [4340]	61 [5400]
daNm [lb-in]	Int.*	31 [2740]	39 [3450]	49 [4340]	60 [5310]	72 [6370]
Max. Output	Cont.	15,5 [20.8]	18 [24.1]	18 [24.1]	16,5 [22.1]	16,5 [22.1]
kW [HP]	Int.*	19,5 [26.2]	22,8 [30.2]	22,5 [30.2]	23 [30.8]	22 [29.52]
Max. Pressure Drop	Cont.	210 [3050]	210 [3050]	210 [3050]	210 [3050]	210 [3050]
bar [PSI]	Int.*	275 [3990]	275 [3990]	275 [3990]	275 [3990]	275 [3990]
	Peak**	295 [4280]	295 [4280]	295 [4280]	295 [4280]	295 [4280]
Max. Oil Flow	Cont.	65 [17]	75 [20]	75 [20]	75 [20]	75 [20]
lpm [GPM]	Int.*	80 [21]	90 [24]	90 [24]	90 [24]	90 [24]
Max. Inlet Pressure	Cont.	230 [3340]	230 [3340]	230 [3340]	230 [3340]	230 [3340]
bar [PSI]	Int.*	295 [4280]	295 [4280]	295 [4280]	295 [4280]	295 [4280]
	Peak**	300 [4350]	300 [4350]	300 [4350]	300 [4350]	300 [4350]
Max. Return Pressure	Cont.	140 [2030]	140 [2030]	140 [2030]	140 [2030]	140 [2030]
with Drain Line	Int.*	175 [2540]	175 [2540]	175 [2540]	175 [2540]	175 [2540]
bar [PSI]	Peak**	210 [3050]	210 [3050]	210 [3050]	210 [3050]	210 [3050]
Max. Starting Pressure with Unloaded Shaft, bar [PSI]		12 [175]	10 [145]	10 [145]	8 [115]	8 [115]
Starting Torque	At max.press. drop Cont.	18 [1590]	23 [2040]	29 [2570]	37 [3270]	47 [4160]
daNm [lb-in]	At max.press. drop Int.*	23,5 [2080]	30 [2660]	38 [3360]	46 [4070]	56 [4960]
Min. Speed*, [RPM]**		10	10	8	8	6
Weight, kg [lb] For rear ports: +0,40 [.88]	MS(F)	9,9 [21.8]	10,1 [22.3]	10,4 [22.9]	10,8 [23.8]	11,2 [24.7]
	MSA	9,8 [21.6]	10,0 [22.0]	10,3 [22.7]	10,7 [23.6]	11,1 [24.5]
	MSW	10,4 [22.9]	10,6 [23.3]	10,9 [24]	11,3 [24.6]	11,7 [25.8]
	MSS	7,9 [17.4]	8,1 [17.8]	8,4 [18.5]	8,8 [19.4]	9,2 [20.2]
	MSV	5,8 [12.8]	6 [13.2]	6,3 [13.9]	6,7 [14.8]	7,1 [15.6]
	MSQ	10,3 [22.7]	10,5 [23.2]	10,8 [23.8]	11,2 [24.7]	11,6 [25.6]
	MSB	16,9 [37.3]	17,1 [37.7]	17,4 [38.3]	17,8 [39.2]	18,2 [41.1]
	MSU	6,5 [14.3]	6,7 [14.8]	7,0 [15.4]	7,4 [16.3]	7,8 [17.2]

* Intermittent operation: the permissible values may occur for max. 10% of every minute.
** Peak load: the permissible values may occur for max. 1% of every minute.
*** For speeds lower than given, consult factory or your regional manager.

1. Intermittent speed and intermittent pressure must not occur simultaneously.
2. Recommended filtration is per ISO cleanliness code 20/16. A nominal filtration of 25 micron or better.
3. Recommend using a premium quality, anti-wear type mineral based hydraulic oil HLP(DIN51524) or HM (ISO 6743/4). If using synthetic fluids consult the factory for alternative seal materials.
4. Recommended minimum oil viscosity 13 mm²/s [70 SUS] at 50°C [122°F].
5. Recommended maximum system operating temperature is 82°C [180°F].
6. To assure optimum motor life fill with fluid prior to loading and run at moderate load and speed for 10-15 minutes.

FUNCTION DIAGRAMS

MS 80

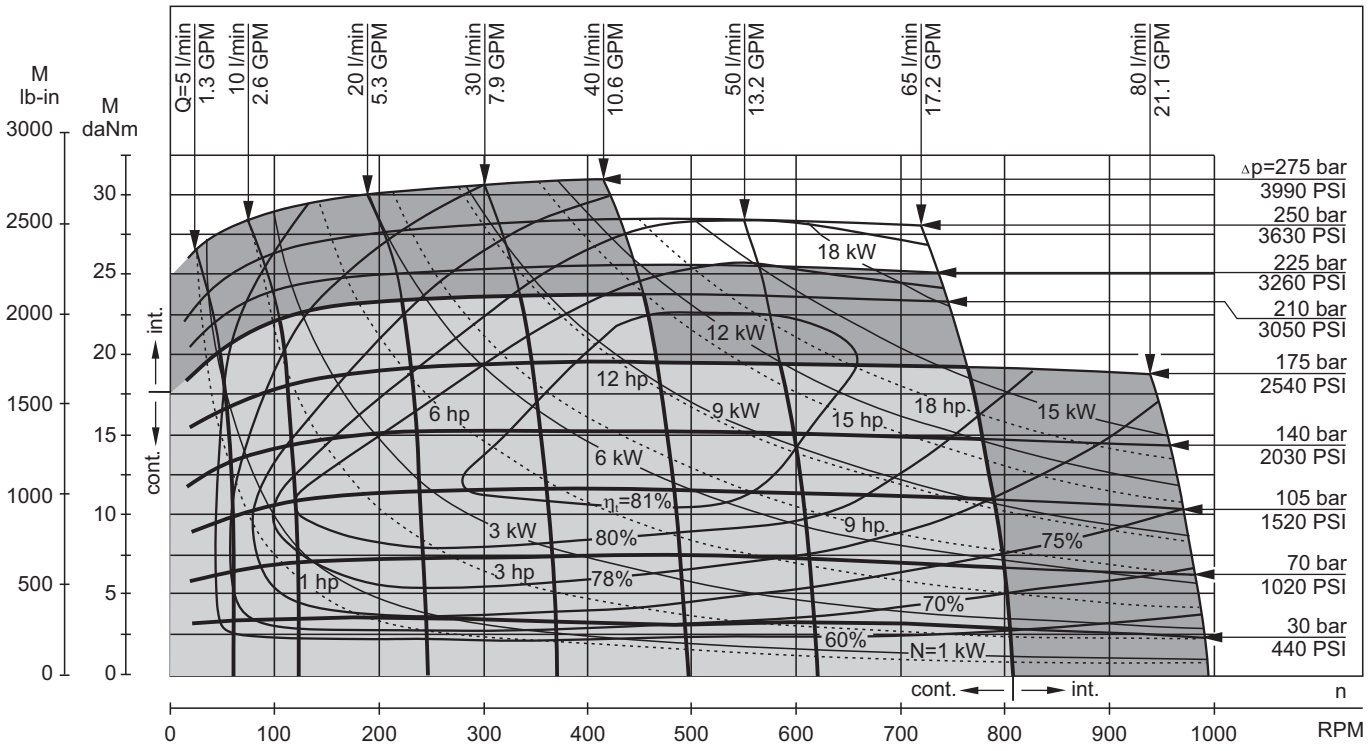

MS 100

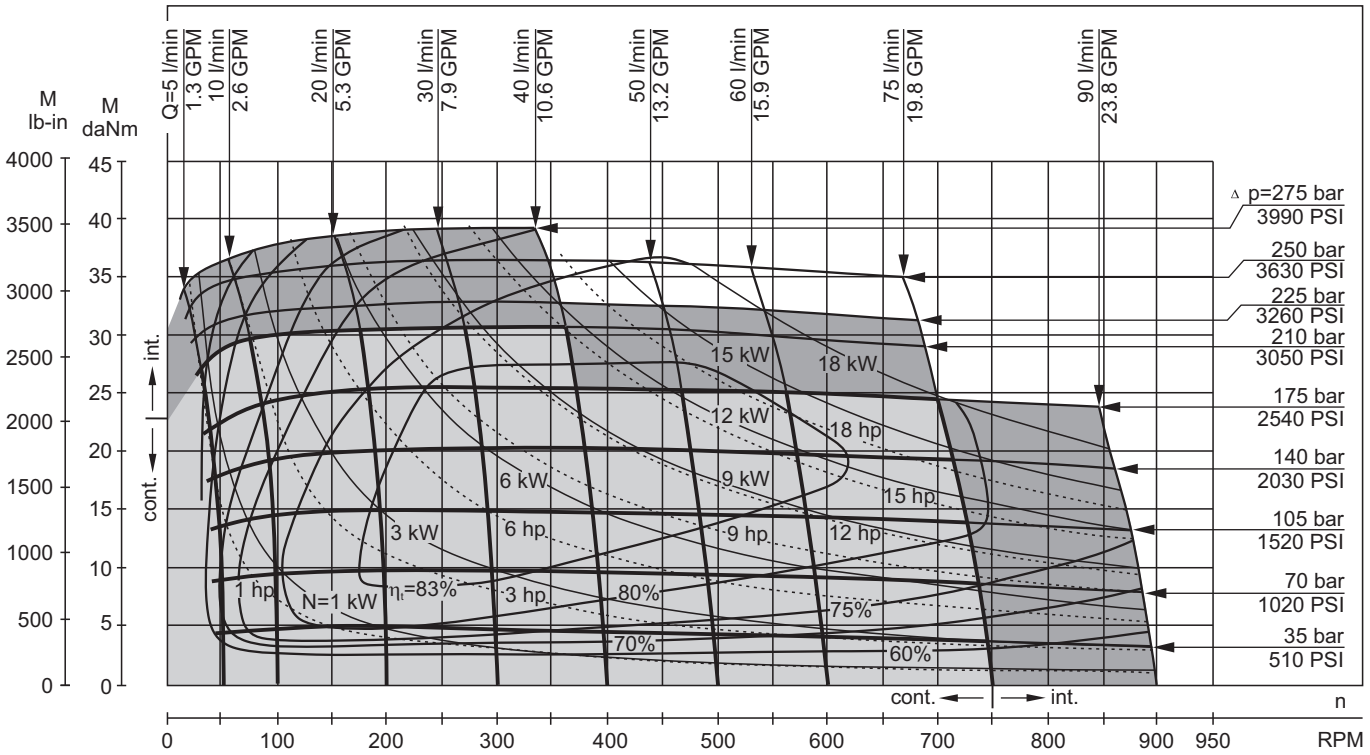

The function diagrams data is for average performance of randomly selected motors at back pressure 5÷10 bar [72.5 PSI÷145 PSI] and oil with viscosity of 32 mm²/s [150 SUS] at 50°C [122°F].

DIMENSIONS and MOUNTING DATA
MS, MSF, MSA, MSW

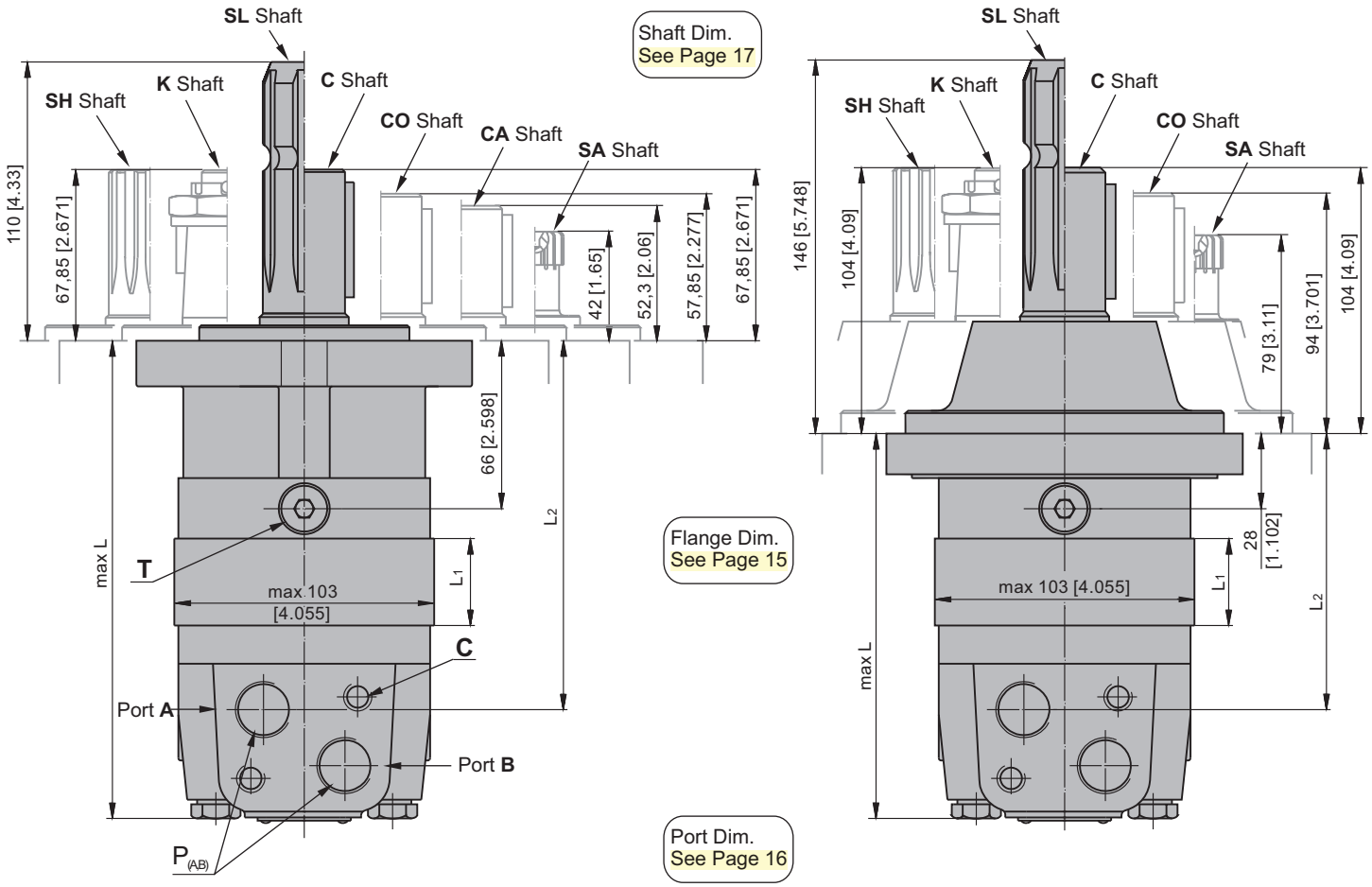

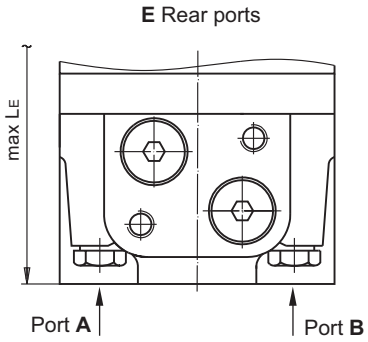

mm [in]

C : 2xM10-12 mm [.47 in] depth
P$_{(A,B)}$: 2xG1/2 or 2xM22x1,5-15 mm [.59 in] depth
T : G ¼ or M14x1,5- 12 mm [.47 in] depth (plugged)

Standard Rotation
Viewed from Shaft End
Port **A** Pressurized - **CW**
Port **B** Pressurized - **CCW**

Reverse Rotation
Viewed from Shaft End
Port **A** Pressurized - **CCW**
Port **B** Pressurized - **CW**

Type	L, mm [in]	L2, mm [in]	*LE, mm [in]	Type	L, mm [in]	L2, mm [in]	*LE, mm [in]	L1, mm [in]
MS(F, A) 80	168 [6.61]	124 [4.88]	173 [6.81]	MSW 80	129 [5.08]	87 [3.43]	138 [5.43]	14,0 [.55]
MS(F, A) 100	171 [6.73]	128 [5.04]	177 [6.97]	MSW100	133 [5.23]	91 [3.58]	142 [5.59]	17,4 [.69]
MS(F, A) 125	176 [6.93]	132 [5.20]	181 [7.13]	MSW 125	137 [5.39]	95 [3.74]	146 [5.75]	21,8 [.86]
MS(F, A) 160	182 [7.17]	138 [5.43]	187 [7.36]	MSW 160	143 [5.63]	101 [3.98]	152 [5.99]	27,8 [1.09]
MS(F, A) 200	189 [7.44]	145 [5.71]	194 [7.64]	MSW 200	150 [5.91]	108 [4.25]	159 [6.26]	34,8 [1.37]
MS(F, A) 250	197 [7.76]	154 [6.06]	203 [7.99]	MSW 250	159 [6.26]	117 [4.61]	168 [6.62]	43,5 [1.71]
MS(F, A) 315	209 [8.23]	165 [6.50]	214 [8.43]	MSW 315	170 [6.69]	128 [5.04]	179 [7.05]	54,8 [2.16]
MS(F, A) 400	223 [8.78]	179 [7.05]	228 [8.98]	MSW 400	184 [7.24]	143 [5.63]	194 [7.64]	69,4 [2.73]
MS(F, A) 475	237 [9.33]	193 [7.60]	242 [9.53]	MSW 475	198 [7.79]	156 [6.14]	207 [8.15]	82,6 [3.25]
MS(F, A) 525	229 [9.02]	185 [7.28]	234 [9.21]	MSW 525	190 [7.48]	148 [5.83]	199 [7.84]	74,5 [2.93]
MS(F, A) 565	235 [9.25]	191 [7.52]	240 [9.45]	MSW 565	196 [7.72]	154 [6.06]	205 [8.07]	80,2 [3.16]

* - For Rear Ported Motors.

MOUNTING

SAE A-4 Mount (4 Holes)

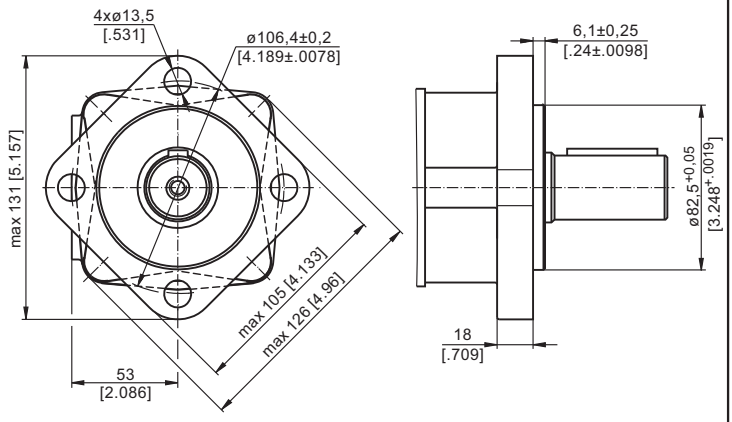

A SAE A-2 Mount (2 Holes)

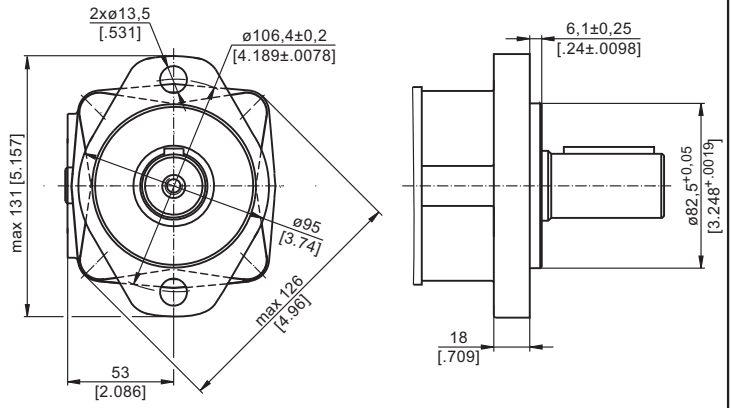

F Magneto Mount (4 Holes)

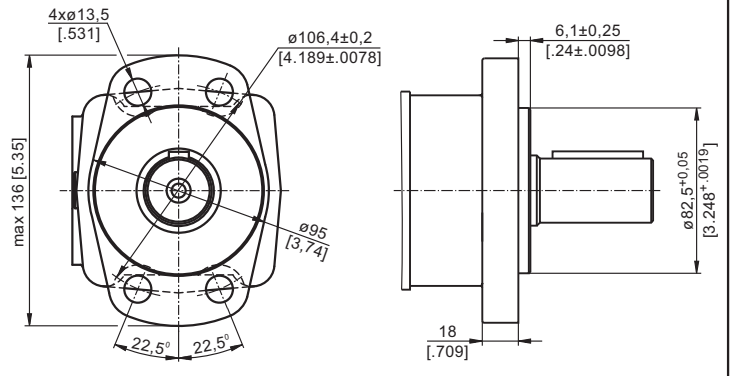

Q Square Mount (4 Holes)

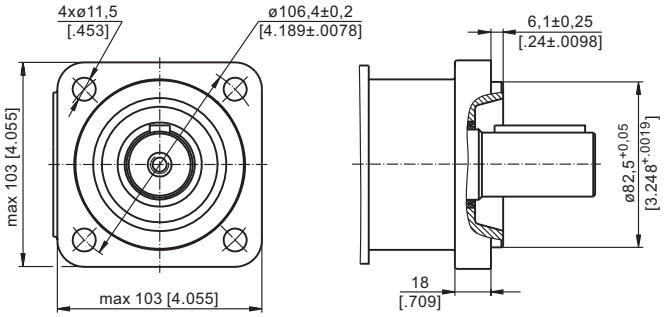

W Wheel Mount

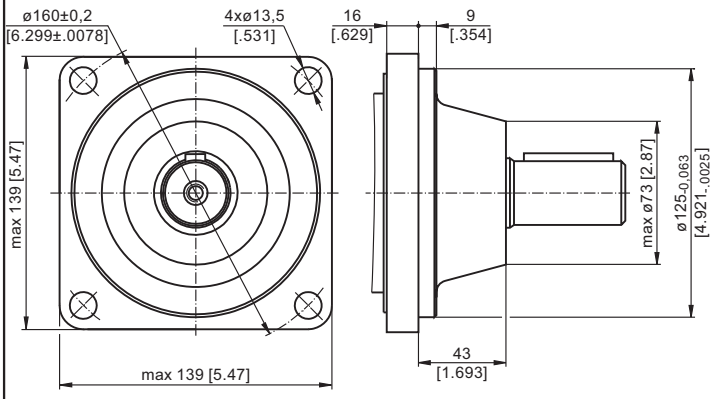

mm [in]

PORTS

Side Ports

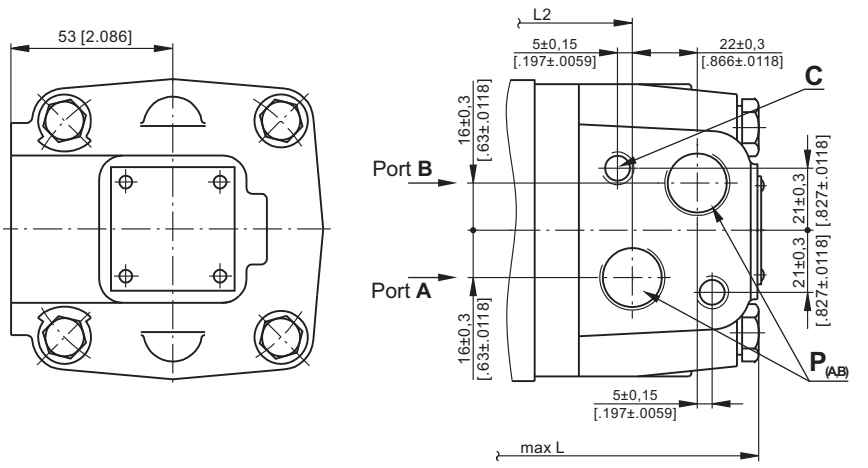

E Rear Ports

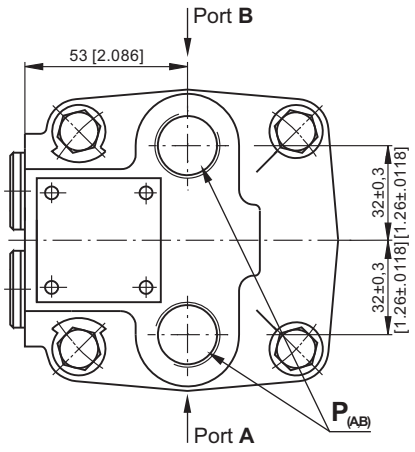

Standard Rotation
Viewed from Shaft End
Port **A** Pressurized - **CW**
Port **B** Pressurized - **CCW**

Reverse Rotation
Viewed from Shaft End
Port **A** Pressurized - **CCW**
Port **B** Pressurized - **CW**

C : 2xM10-12 mm [.47 in] depth
P$_{(A,B)}$: 2xG1/2 or 2xM22x1,5-15 mm [.59 in] depth
T : G ¼ or M14x1,5- 12 mm [.47 in] depth (plugged)

MOTORS with TACHO CONNECTION

mm [in]

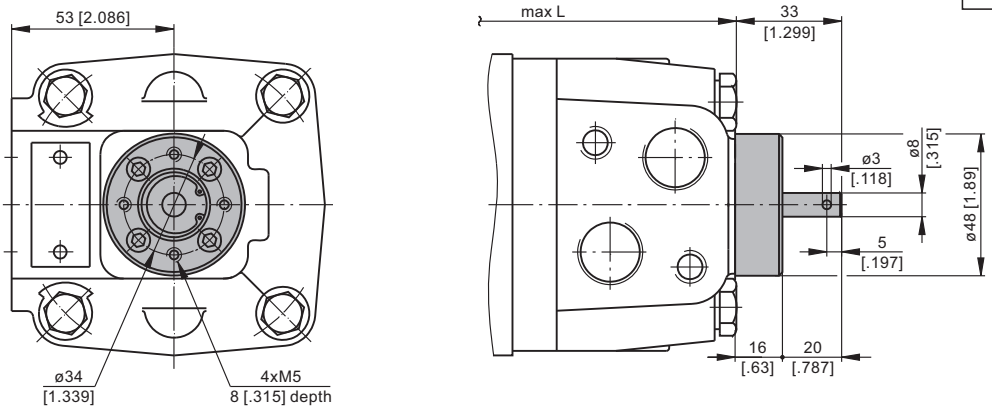

MAX. PERMISSIBLE SHAFT SEAL PRESSURE

Max. return pressure without drain line or
max. pressure in the drain line

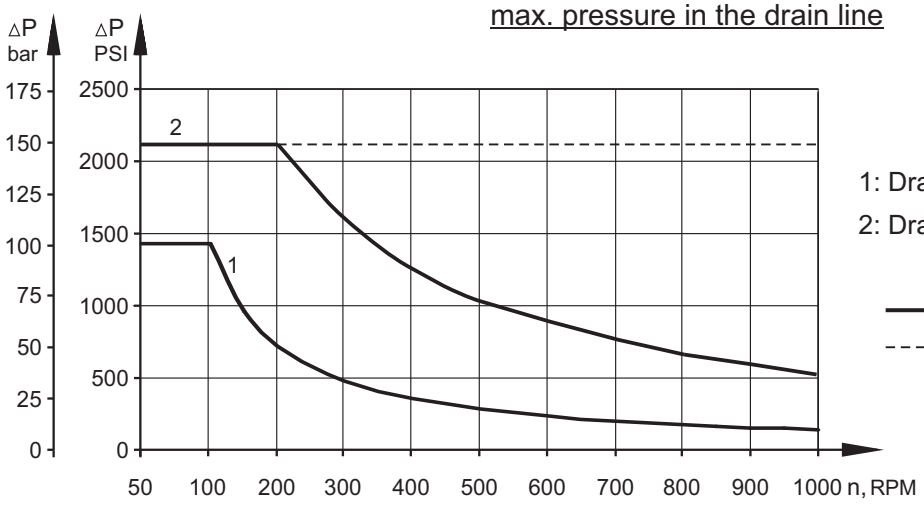

1: Drawing for Standard Shaft Seal
2: Drawing for High Pressure Seal ("U" Seal)

——— - continuous operations
– – – – – - intermittent operations

SHAFT EXTENSIONS

C - ø32 straight, Parallel key A10x8x45 DIN 6885
Max. Torque 77 daNm [6815 lb-in]

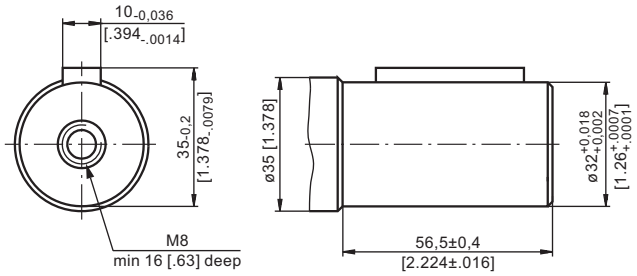

K - tapered 1:10, Parallel key B6x6x20 DIN 6885
Max. Torque 95 daNm [8400 lb-in]

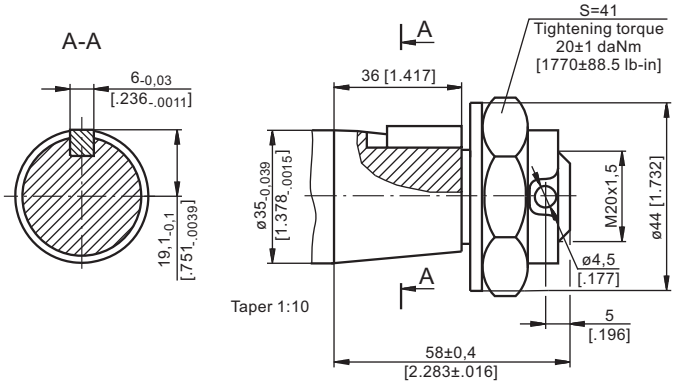

CO - ø1¼" straight, Parallel key 5/16"x 5/16"x 1¼"BS46
Max. Torque 77 daNm [6815 lb-in]

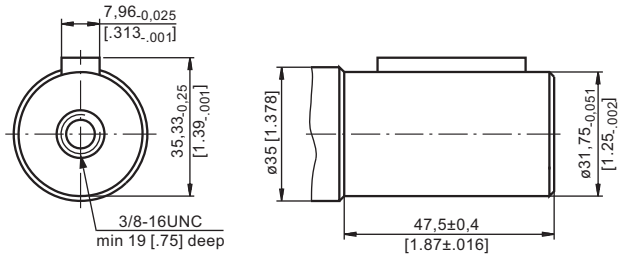

SH - ø1¼" splined 14T, DP12/24 ANS B92.1-1970
Max. Torque 95 daNm [8400 lb-in]

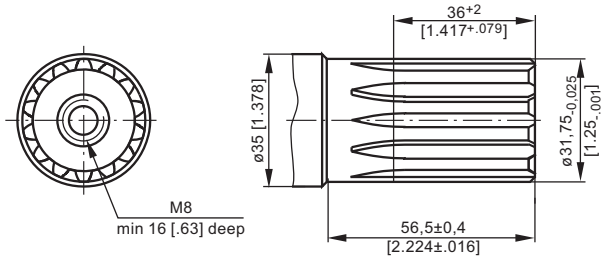

SL - ø34,85 p.t.o. DIN 9611 Form 1
Max. Torque 77 daNm [6815 lb-in]

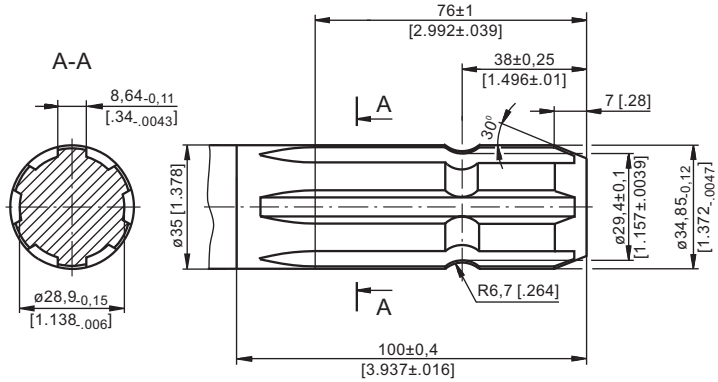

SA - 7/8"-13T splined DP16/32 ANS B92.1-1970
Max. Torque 20 daNm [1770 lb-in]

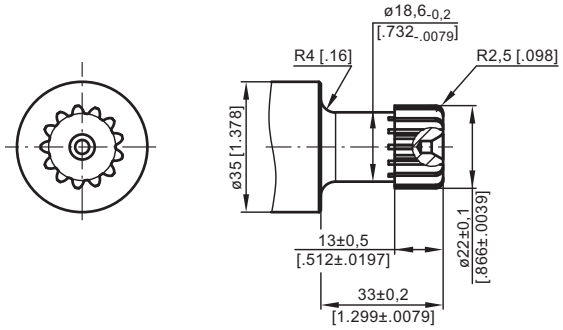

CA - ø25 straight, Parallel key A8x7x32 DIN 6885
Max. Torque 34 daNm [3010 lb-in]

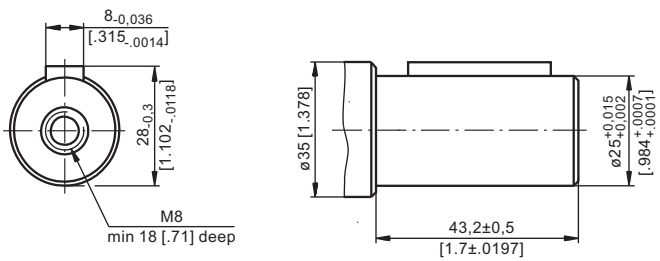

mm [in]

PERMISSIBLE SHAFT LOADS

The output shaft runs in tapered bearings that permit high axial and radial forces. The permissible radial load on the shaft is shown for an axial load of 0 N as function of the distance from the mounting flange to the point of load application. The curves apply to a B10 bearing life of 2000 hours at 100 RPM.
Curve "**1**" shows max. radial shaft load. Any shaft load exceeding the values shown by the curve will seriously reduce motor life.

Mounting Flange:

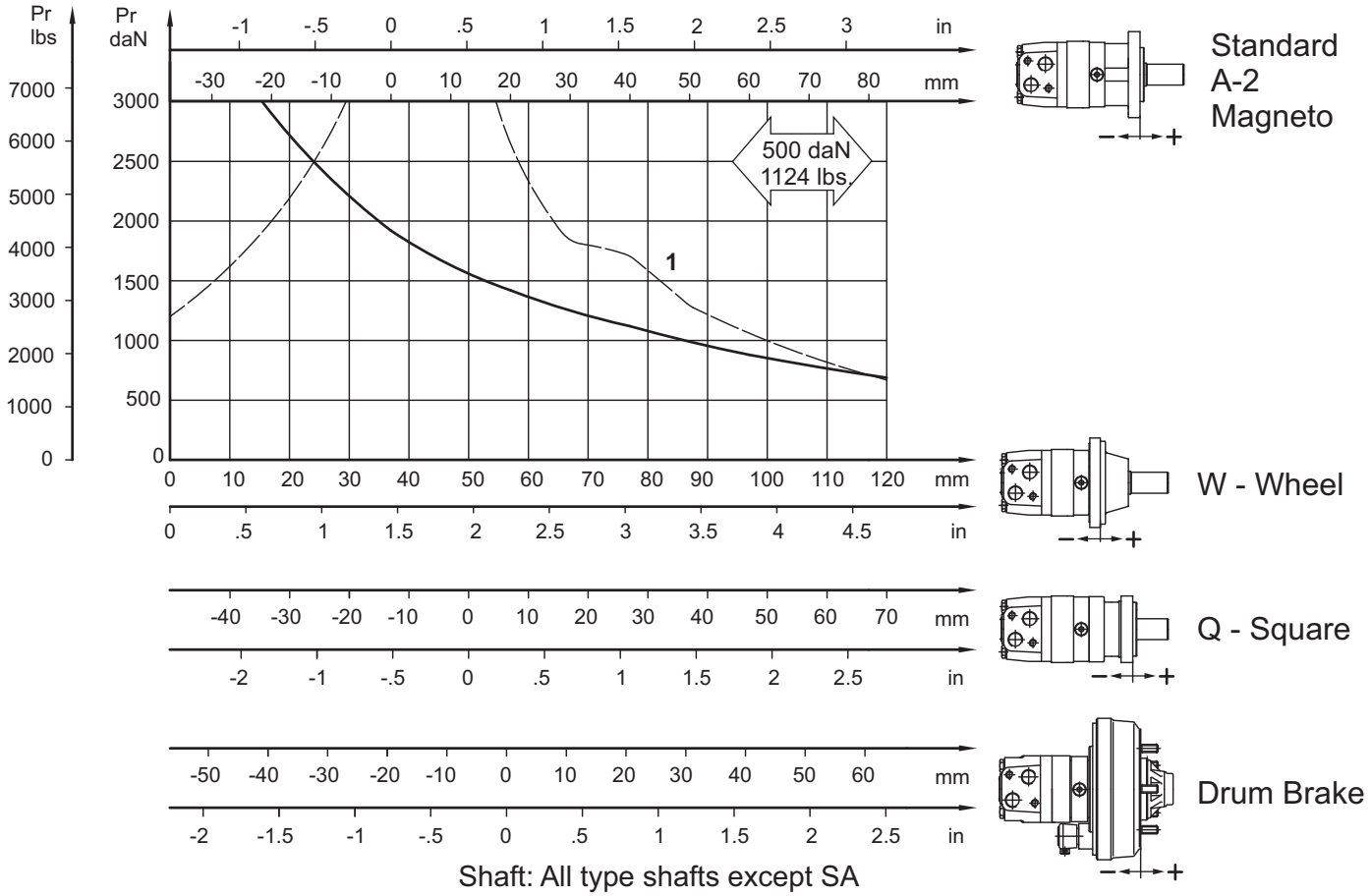

Shaft: All type shafts except SA

FUNCTION DIAGRAM MSB

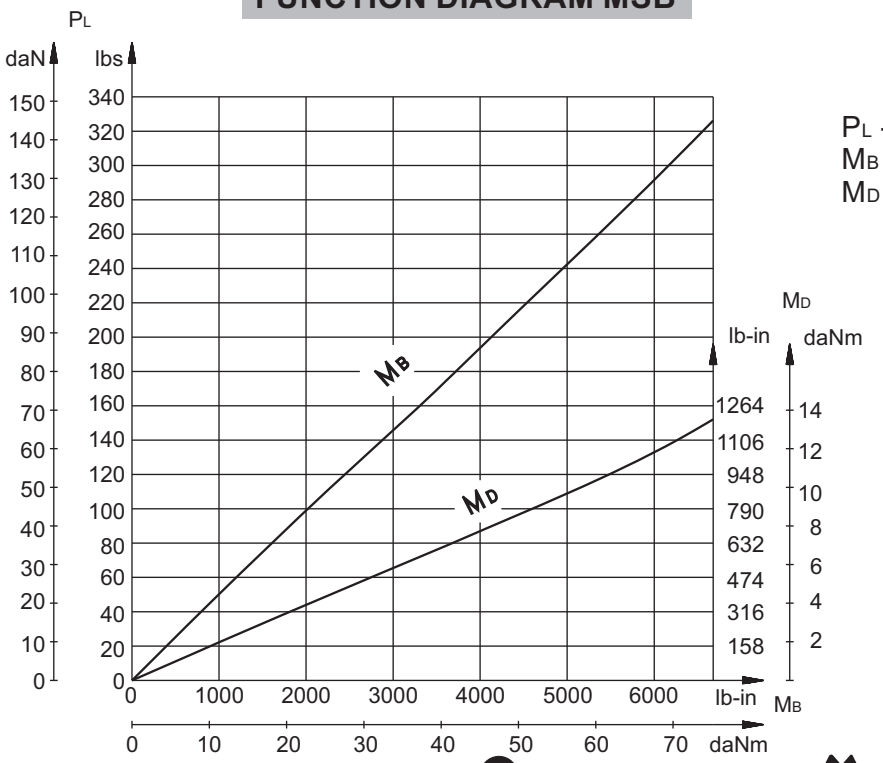

P_L - Brake Lever Load
M_B - Brake Torque
M_D - Brake Lever Torque

ORDER CODE

	1	2	3	4	5	6	7	8	9
M S									

Pos.1 - Mounting Flange

omit - SAE A-4 mount, four holes
A - SAE A-2 mount, four holes
F - Magneto mount, four holes
Q - Square mount, four holes
B - Motor with drum brake
S - Short motor
V - Very short motor
U - Ultra short motor
W - Wheel mount

Pos.2 - Port type

omit - Side ports
E - Rear ports

Pos.3 - Displacement code

80 - 80,5 cm^3/rev [4.91 in^3/rev]
100 - 100,0 cm^3/rev [6.10 in^3/rev]
125 - 125,7 cm^3/rev [7.67 in^3/rev]
160 - 159,7 cm^3/rev [9.74 in^3/rev]
200 - 200,0 cm^3/rev [12.20 in^3/rev]
250 - 250,0 cm^3/rev [15.30 in^3/rev]
315 - 314,9 cm^3/rev [19.20 in^3/rev]
400 - 397,0 cm^3/rev [24.20 in^3/rev]
475 - 474,6 cm^3/rev [28.96 in^3/rev]
525 - 522,7 cm^3/rev [31.88 in^3/rev]
565 - 564,9 cm^3/rev [34.47 in^3/rev]

Pos.4 - Shaft Extensions*

omit - for **B**, **S**, **U** and **V** mounting flange
C - ø32 straight, Parallel key A10x8x45 DIN6885
CO - ø1¼" straight, Parallel key $^5/_{16}$"x$^5/_{16}$"x1¼" BS46
K - ø35 tapered 1:10, Parallel key B6x6x20 DIN6885
SL - ø34,85 p.t.o. DIN 9611 Form 1
SH - ø1¼" splined 14T ANS B92.1-1970
SA - 7/8"-13T splined ANS B92.1-1970
CA - ø25 straight, Parallel key A8x7x32 DIN6885

Pos.5 - Shaft Seal Version** (see page 16)

omit - Low pressure seal
U - High pressure seal

Pos.6 - Ports

omit - BSPP (ISO 228)
M - Metric (ISO 262)

Pos.7 - Actuating Direction***

/R - Right
/L - Left

Pos.8 - Additional Options (see page 51)

Pos.9 - Design Series

omit - Factory specified

NOTES:

The following combinations are not allowed: **Q** flange with "**CO**", "**CA**" and "**SA**" shafts.

* The permissible output torque for shafts must not be exceeded!
** Shaft seal is available with the "omit" and "W" mounting flange only!
*** For MSB only!

The hydraulic motors are mangano-phosphatized as standard.