Hydraulic Pump & Motor Division Europe
Parker Hannifin Mfg. Sweden AB
Flygmotorvägen 2
461 38 Trollhättan, Sverige
Ph: +46520 40 46 00
www.parker.com/MSGE

ENGINEERING YOUR SUCCESS.

Pump & Motor Division Europe
P2/P3 Series

P2060L00B2B21LA20N00T1B1P

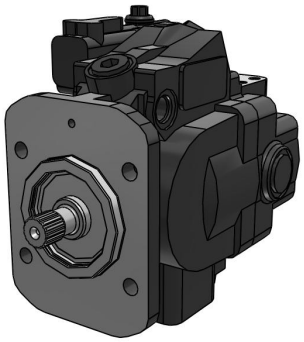

Interactive 3D graphic, click to activate and rotate
(3D capable PDF viewer required)

Technical Data	
Part No.	P2060L00B2B21LA20N00T1B1P
Series	P2/P3 Series
Pump Series	P2 - Standard
Displacement	060 - 60 cc/rev (3.7 cu.in./rev)
Rotation	L - Counterclockwise (CCW)
Max Volume Stop Setting (70% - 100%)	00 - Default (full pump displacement)
Shaft Options	B2 - SAE BB Spline
Mounting Flange	B - SAE B Pilot (4 in.)
Pressure Setting of Max Pressure Control [bar/10]	21
Controls	LA - Load sensing (2 spool)/Pmax without bleed orifice
Differential Pressure	20 - DIFFERENTIAL PRESSURE SETTING
Seal Type	N - Nitrile, single shaft seal
Torque Control Setting Low range	N/A
Torque Control Setting High Range	N/A
Torque Set for Pa Pb Lb Controls	00
Through Drive Configuration	T1 - Prepared for Through Drive (cover plate)
Port Location & Threads	B - Side - Inline Flange Ports - ISO 6149 / Metric threads
Multiple Pump Options	1 - Shipped as individual pump
Paint / Special Modifications	P - Pump Painted Black

PDF Datasheet Powered by CADENAS PARTsolutions

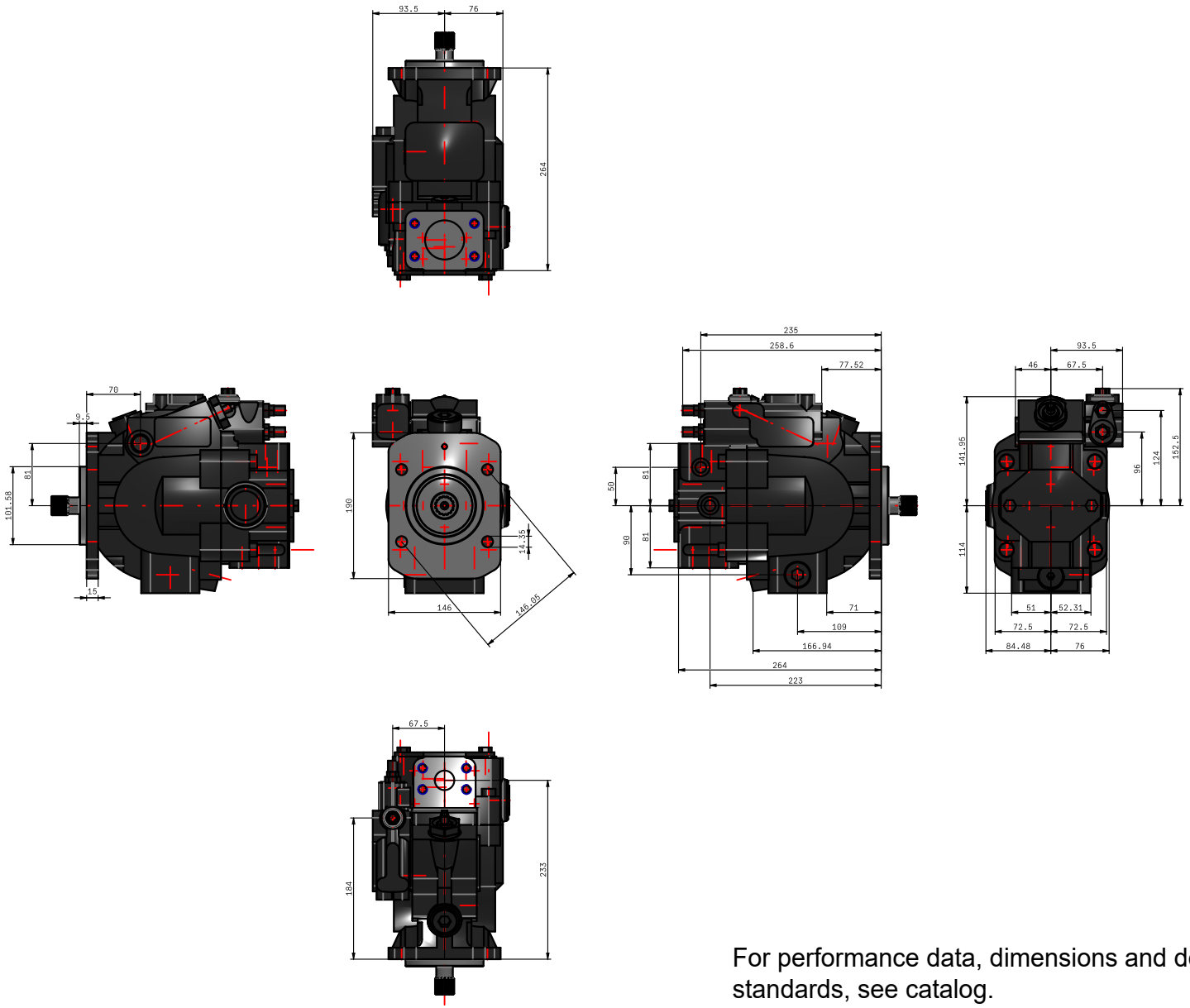

For performance data, dimensions and deviations from standards, see catalog.

Disclaimer:
Parker PMDE has a continuous policy of product development and although the Company reserves the right to change specifications, it attempts to keep customers informed of any alterations. This publication is for general information only and customers are requested to contact their local Parker dealer for detailed information and advice on a products suitability for specific applications. All products are sold subject to the company's Standard conditions of sale.

P2060L00B2B21LA20N00T1B1P

Price: contact Parker

PDF Datasheet Powered by CADENAS PARTsolutions