MDHC series

Maximum working pressure up to 1 MPa (10 bar) - Flow rate up to 500 l/min



MDHC250 GENERAL INFORMATION

Description

Return filter

Maximum working pressure up to 1 MPa (10 bar)
Flow rate up to 500 l/min

MDHC, is a technically advanced filtration product line for efficient and compact, hydraulic reservoir management. Designed to ensure overall system cleanliness, the filters are either installed in a semi immersed or fully immersed position. This new design reduces the volume of the air coming into the tank space and dramatically reduces the velocity of the air through the filter which in turn allows the separation of the air from the fluid. This insures that the system is protected against the effects caused by air contamination such as incorrect system response, cavitation, foaming and fluid degradation. The filtration from inside to outside allows for a cleaner filter element replacement which insures that any contaminated fluid remains within the used filter element.

Available features:

- Female threaded connections up to 1 1/2" and flanged connections up to 1 1/2", for a maximum flow rate of 500 l/min
- Multiple connections, to connect several return lines or drains
- In to Out filtration, to reduce the risk of residual contamination going into the system during the maintenance works
- Fine filtration rating, to get a good cleanliness level into the reservoir
- Bypass valve, to relieve excessive pressure drop across the filter media
- Flat Seal to suit a variety of reservoir surfaces
- Oil dipstick, to easily check the level of the fluid into the reservoir (separate item)
- Anti-drain membrane, to reduce the volume of air coming to the tank
- Optimized flow path, to reduce the speed of the fluid through the filter
- Diffuser with optimized output, to promote the air separation and to reduce the risk of foaming and noise
- Optional filler plug, to fill cleaned fluid into the tank without an additional plug
- Visual, electrical and electronic clogging indicators and differential pressure clogging indicators

Common applications:

Heavy duty industrial equipment
Large mobile machines with limited space for the tank

Technical data

Filter housing materials

- Head and cover: Aluminium
- Anti-drain membrane: Polyamide
- Diffuser: AISI 430
- Valve: Polyamide / Steel

Pressure

- Test pressure: 1.5 MPa (15 bar)
- Min. Burst pressure: 3 MPa (30 bar)
- Pulse pressure fatigue test: 1 000 000 cycles with pressure from 0 to 1 MPa (10 bar)

Bypass valve

- Opening pressure 0.175 MPa (1.75 bar) ±10%
- Opening pressure 0.3 MPa (3 bar) ±10%

Filter element features

Filter		Filter element	
MDHC		DHC	
Δp Element type			
Element media	**Construction**	**Δp Series**	**Δp**
A - Microfiber	Standard	D	10 bar
M - Wire mesh	Standard	D	10 bar
P - Paper	Standard	D	10 bar
Please see ordering code tables to check element Δp series availability based on filter features.			
Flow direction through the filter element: From IN to OUT			

Seals

- Standard NBR series A or W
- Optional FPM series V or Z

Temperature

From -25 °C to +110 °C

Note

MDHC filters are provided for vertical mounting

Weights [kg] and volumes [dm³]

Filter series	Weights [kg]			Volumes [dm³]		
	Length	20	40	Length	20	40
MDHC 250		3.80	4.55		4.65	6.90

Flow rates [l/min]

Filter series	Length	Filter element design - D series					Filter element design - D series		
		A0003	A0006	A0010	A0016	A0025	M0025 M0060 M0090	P0010	P0025
MDHC 250	**20**	134	120	244	255	303	480	326	370
	40	217	256	338	419	487	465	437	694

Maximum flow rate for a complete return filter with a pressure drop Δp = 0.5 bar.
The reference fluid has a kinematic viscosity of 30 mm^2/s (cSt) and a density of 0.86 kg/dm^3.
For different pressure drop or fluid viscosity we recommend to use our selection software available on www.mpfiltri.com.
You can also calculate the right size using the formulas present on the FILTER SIZING paragraph at the beginning of the full catalogue or at the beginning of the filter family brochure.
Please, contact our Sales Department for further additional information.

Hydraulic diagram

Filter series	17 / 30 - with bypass 1.75 / 3.0 bar Triple IN port
MDHC 250	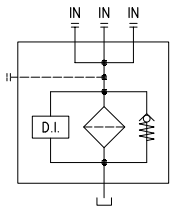

Pressure drop

Filter housings Δp pressure drop

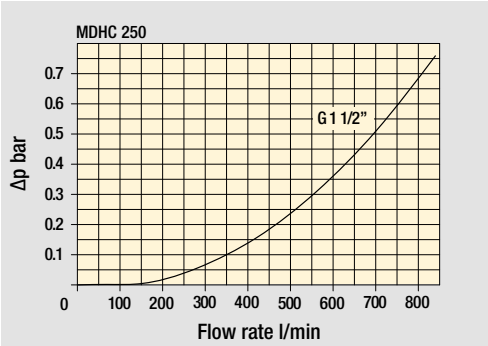

Bypass valve pressure drop

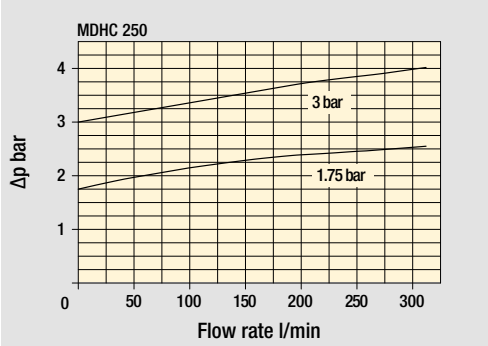

The curves are plotted using mineral oil with density of 0.86 kg/dm^3 in compliance with ISO 3968. Δp varies proportionally with density.

MDHC250

Designation & Ordering code

COMPLETE FILTER

Example: MDHC | 250 | 20 | A0025 | D | W | 30 | FS024 | 1 | 9T | DA | P01 | NN

Series
MDHC

Size
250

Length
20
40

Filtration rating (filter media)

A0003	Inorganic microfiber	3 µm
A0006	Inorganic microfiber	6 µm
A0010	Inorganic microfiber	10 µm
A0016	Inorganic microfiber	16 µm
A0025	Inorganic microfiber	25 µm
M0025	Wire mesh	25 µm
M0060	Wire mesh	60 µm
M0090	Wire mesh	90 µm
P0010	Resin impregnated paper	10 µm
P0025	Resin impregnated paper	25 µm

Element Δp
D 10 bar

Seals and treatments

		A0xxx	M0xxx	P0xxx
A	NBR	•	•	•
V	FPM	•	•	•
W	NBR with filter and components surface treatment	•	•	-
Z	FPM with filter and components surface treatment	•	•	-

By-pass valve
17 1.75 bar
30 3.0 bar

Connections
FG112 G 1 1/2" | **FN112** 1 1/2" NPT | **FS024** SAE 24 - 1 7/8" - 12 UN

Additional connections

			Left flange + thread	Right flange + thread
1	With additional connections	Front thread: FG112	1 1/2" SAE 3000 psi/M + G 1 1/4"	1 1/4" SAE 3000 psi/M + G 1"
		Front thread: FN112	1 1/2" SAE 3000 psi/UNC + 1 1/4" NPT	1 1/4" SAE 3000 psi/UNC + 1" NPT
		Front thread: FS024	1 1/2" SAE 3000 psi/UNC + SAE 20 - 1 5/8" - 12 UN	1 1/4" SAE 3000 psi/UNC + SAE 16 - 1 5/16" - 12 UN

Connections for clogging indicator
0N Without indicator connection
9T With multiple indicator connections, with metal plugs

Additional features
DA With diffuser

Execution
P01 Standard catalogue item

Certificates
NN None

CLOGGING INDICATORS

See pages 776-777

BVA Axial pressure gauge
BVR Radial pressure gauge
BVP Visual pressure indicator with automatic reset
BVQ Visual pressure indicator with manual reset
BEA Electrical pressure indicator
BEM Electrical pressure indicator
BLA Electrical / visual pressure indicator
DES Electrical differential pressure indicator
DVS Visual differential pressure indicator

PLUG

See page 807

T4 Plug

MDHC250

Dimensions

MDHC250			
Filter length	**H1 [mm]**	**H2 [mm]**	**H3 [mm]**
20	300	380	145
40	485	565	320

Connections	T
FG112	G 1/8”
FN112	1/8” NPT
FS024	1/8” NPT

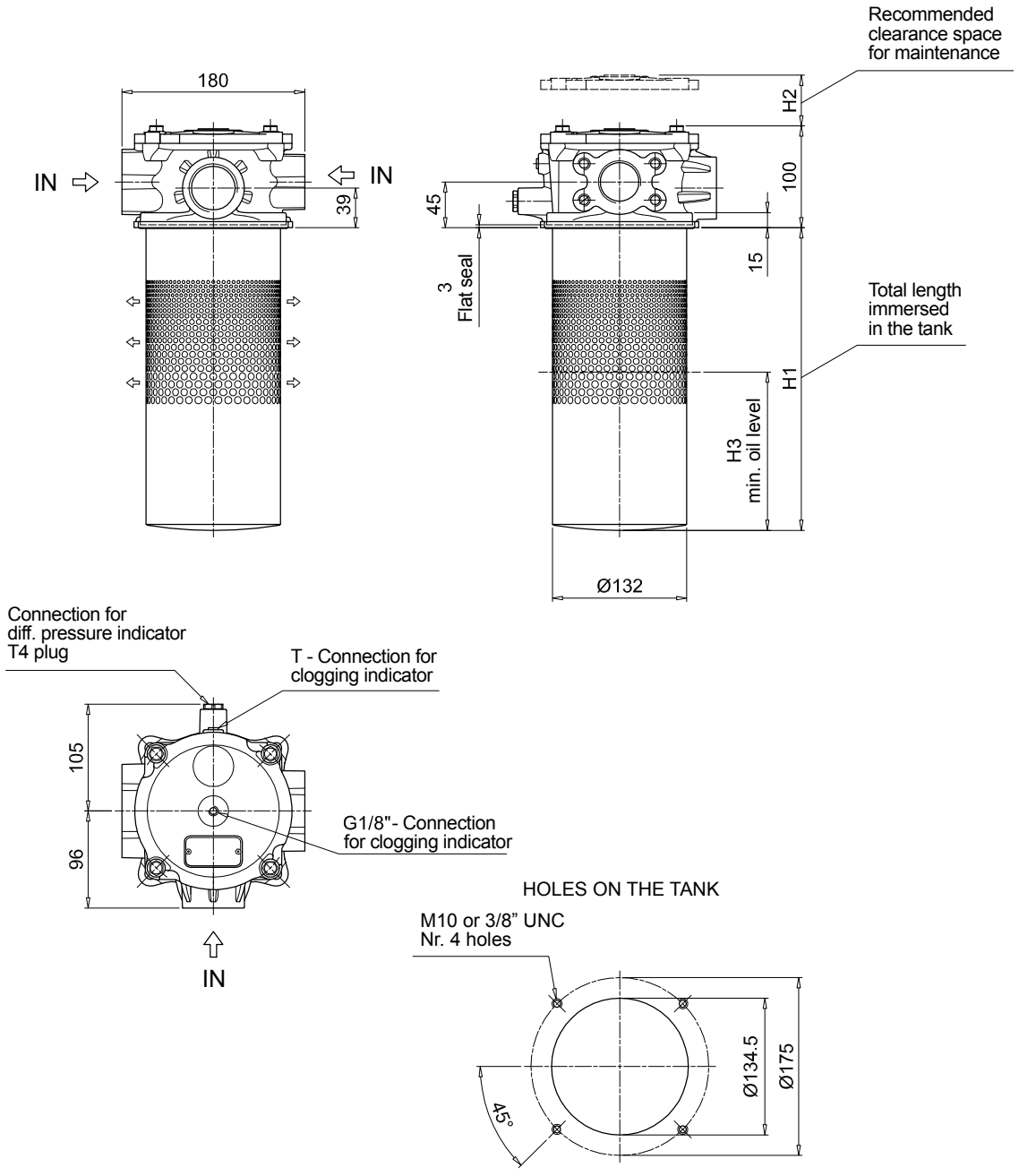

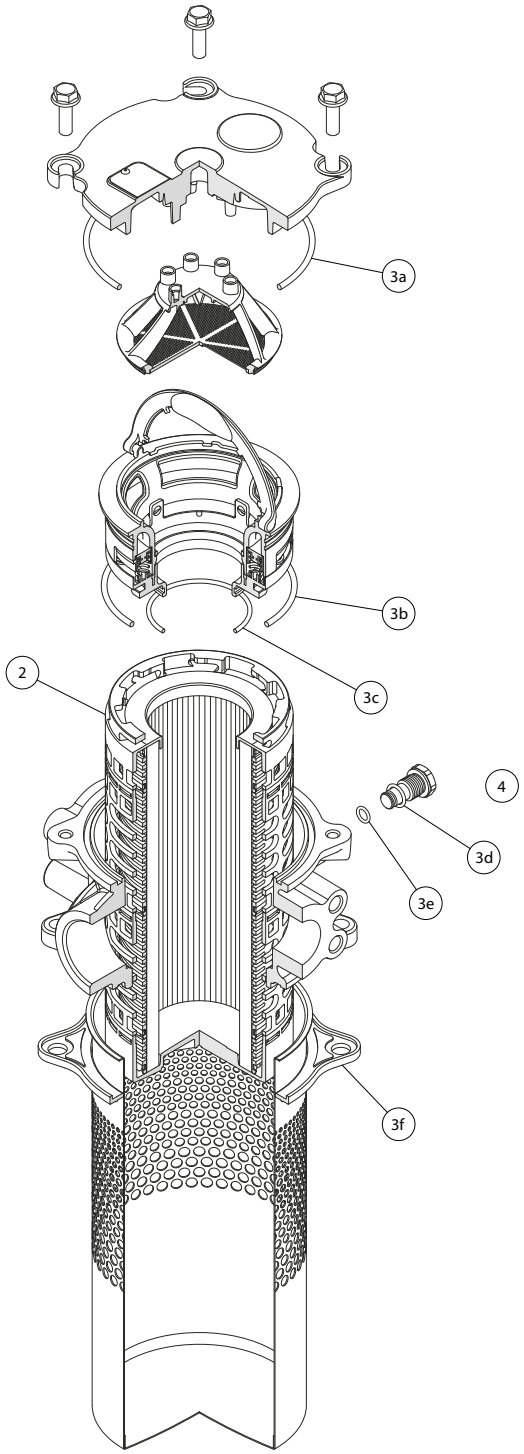

Item:	Q.ty: 1 pc. (2)	Q.ty: 1 pc. (3) (3a ÷ 3f)		Q.ty: 1 pc. (4)
Filter series	**Filter element**	**Seal Kit code number NBR**	**FPM**	**Indicator connection plug NBR**
MDHC 250	See order table	AK021000806	AK021000807	T4A