Motor features

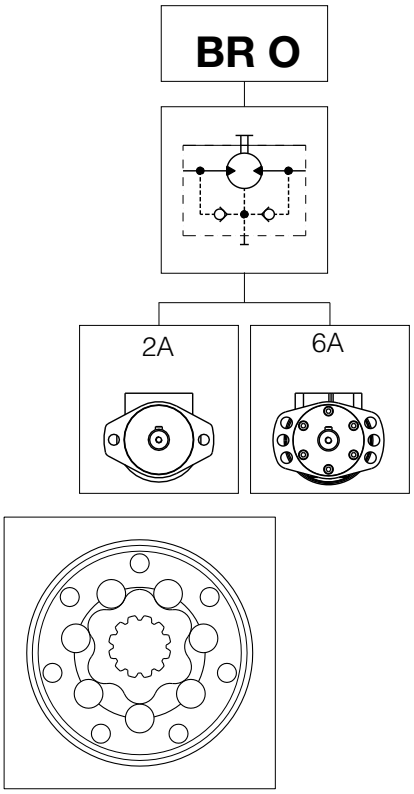

High-performance roller for improved efficiency and life.

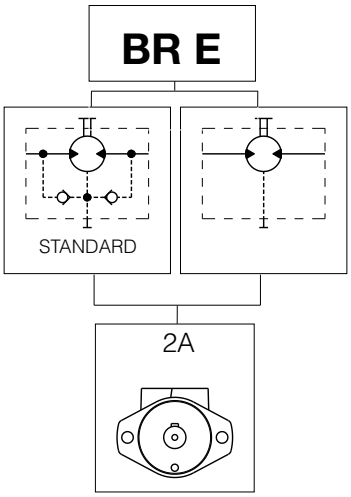

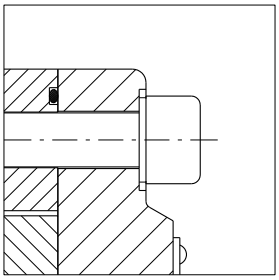

High resistance stainless steel screws capable of withstanding the stress induced by high pressure.

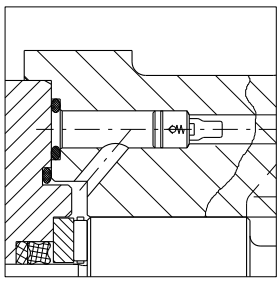

Built in check valves: to relieve case pressure to the low pressure side of the motor.

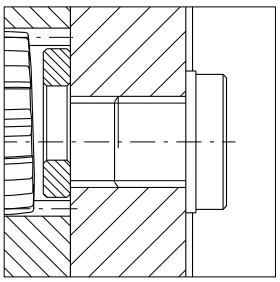

Case drain at rear (shown with plug).

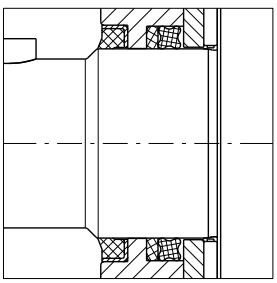

Dust seal to protect the high pressure shaft seal from dust and debris.

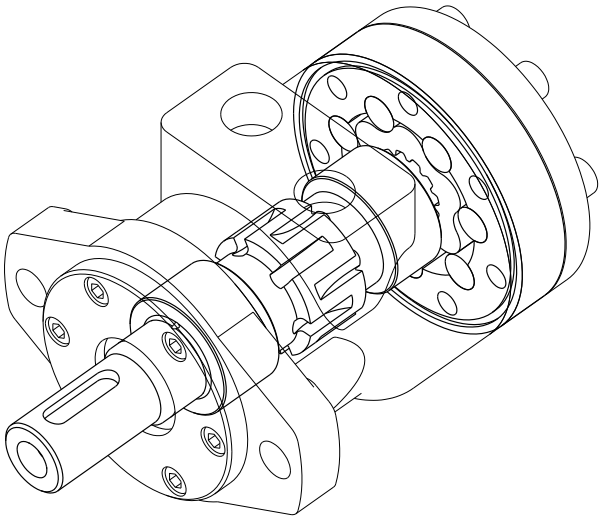

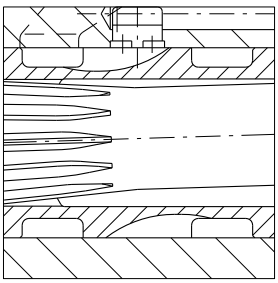

Spool valve integral to the output shaft of new design features optimizing clearance geometry and so minimizing the oil slippage.

BR MOTOR TECHNICAL DATA

Motor	Displacement cm³/rev [in³/rev]	Max. input pressure bar [psi]	Max. differential pressure bar [psi]	Max. torque [1] Nm [lbf·ft]	Max. flow l/min [U.S. gpm]	Max. speed rpm	Max. power kW [hp]
BR050	51.6 [3.14]	Cont 200 [2900] Int 225 [3262]	Cont 150 [2175] Int 175 [2540]	Cont 100 [890] Int 120 [1060]	Cont 40 [11] Int 50 [13]	Cont 775 Int 970	Cont 7.0 [9.4] Int 8.8 [11.7]
BR065	64.9 [3.95]	Cont 200 [2900] Int 225 [3262]	Cont 180 [2610] Int 200 [2900]	Cont 160 [1420] Int 175 [1550]	Cont 50 [13] Int 60 [16]	Cont 770 Int 925	Cont 11 [14.7] Int 11.8 [15.8]
BR080	80.4 [4.9]	Cont 200 [2900] Int 225 [3262]	Cont 200 [2900] Int 225 [3262]	Cont 215 [1900] Int 235 [2080]	Cont 60 [16] Int 75 [20]	Cont 750 Int 940	Cont 14 [18.8] Int 15.8 [21.1]
BR100	99.9 [6.1]	Cont 200 [2900] Int 225 [3262]	Cont 200 [2900] Int 225 [3262]	Cont 275 [2435] Int 300 [2655]	Cont 60 [16] Int 75 [20]	Cont 600 Int 750	Cont 14 [18.8] Int 17.5 [23.5]
BR130	125.1 [7.66]	Cont 200 [2900] Int 225 [3262]	Cont 200 [2900] Int 225 [3262]	Cont 330 [2920] Int 360 [3185]	Cont 60 [16] Int 75 [20]	Cont 475 Int 600	Cont 14 [18.8] Int 17.5 [23.5]
BR160	159.6 [9.76]	Cont 200 [2900] Int 225 [3262]	Cont 180 [2610] Int 215 [3118]	Cont 380 [3365] Int 435 [3580]	Cont 60 [16] Int 75 [20]	Cont 385 Int 480	Cont 12.6 [16.9] Int 15.8 [21.1]
BR200	199.7 [12.2]	Cont 200 [2900] Int 225 [3262]	Cont 175 [2465] Int 200 [2900]	Cont 450 3985] Int 540 [4780]	Cont 60 [16] Int 75 [20]	Cont 300 Int 380	Cont 13.4 [17.9] Int 14.4 [19.2]
BR250	249.7 [15.2]	Cont 200 [2900] Int 225 [3262]	Cont 175 [2540] Int 200 [2900]	Cont 578 [5115] Int 630 [5575]	Cont 60 [16] Int 75 [20]	Cont 240 Int 300	Cont 13.8 [18.4] Int 14.2 [19]
BR315	314.5 [19.1]	Cont 200 [2900] Int 225 [3262]	Cont 135 [1958] Int 175 [2540]	Cont 575 [5090] Int 736 [6515]	Cont 60 [16] Int 75 [20]	Cont 190 Int 240	Cont 9.6 [12.8] Int 11.5 [15.4]
BR400	392.5 [23.9]	Cont 200 [2900] Int 225 [3262]	Cont 115 [1668] Int 150 [2175]	Cont 612 [5415] Int 750 [6640]	Cont 60 [16] Int 75 [20]	Cont 155 Int 195	Cont 8.6 [11.5] Int 10.8 [14.4]

[1] Intermittent operation: the permissible values may occur for max. 10% of every minute.

Maximun torque values for the different output shafts can be found in page E18

BR200

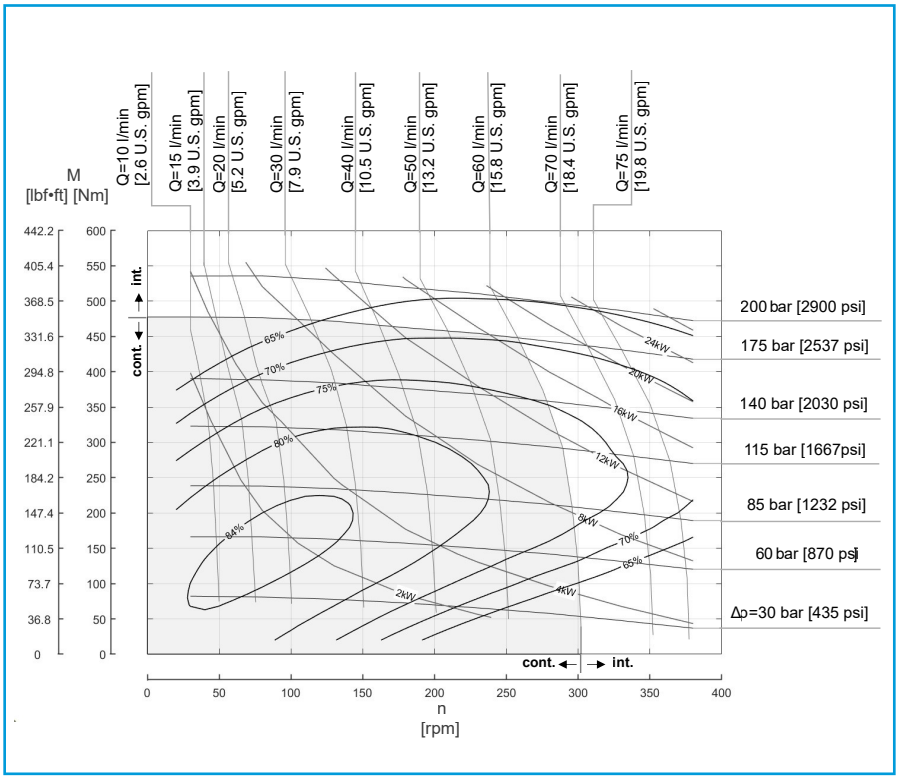

* Constant maximum pressure for Ø25 shaft model.
* Intermittent maximum pressure for Ø25 shaft model.

Exceeding continuous pressure values or exceeding flow values indicated, must not occur simultaneously.

BR250

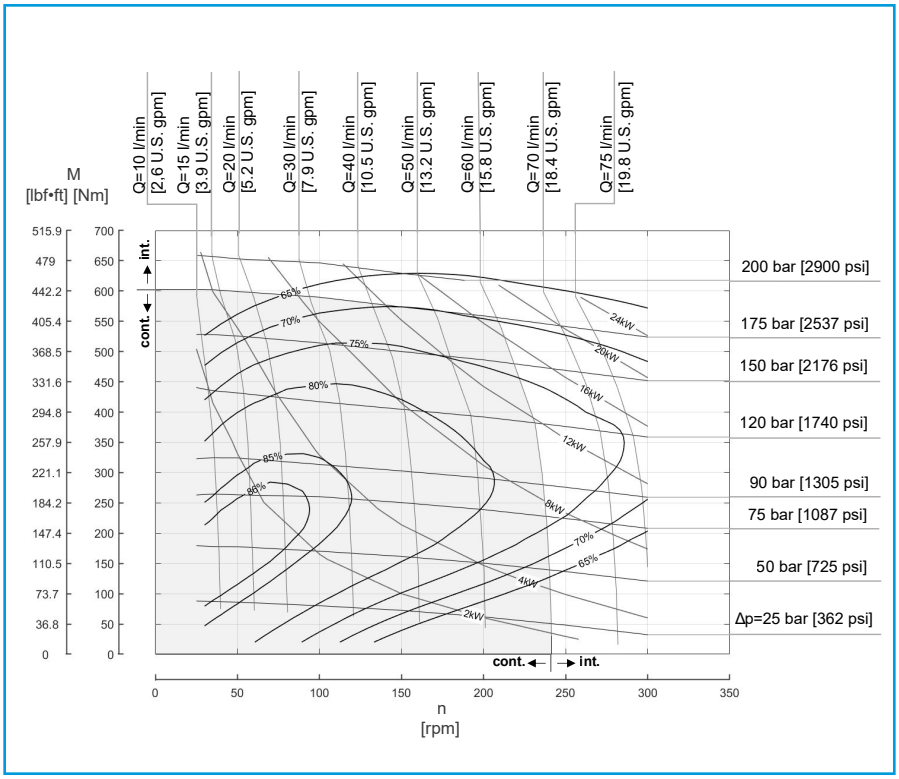

* Constant maximum pressure for Ø25 shaft model.
* Intermittent maximum pressure for Ø25 shaft model.

Exceeding continuous pressure values or exceeding flow values indicated, must not occur simultaneously.

Pressure Data

Motor	Displacement cm³/rev [in³/rev]	Max back pressure with drain line bar[psi]		Max starting pressure in unloaded conditions bar[psi]	Min starting torque Nm[lbf·ft]		Max flow l/min [U.S. gpm]		Min speed [rpm]
BR 050	51.6 [3.14]	Cont Int [1]	200 [2900] 225 [3262]	10 [145]	Cont Int [1]	85 [750] 100 [890]	Cont Int [1]	40 [11] 50 [13]	10
BR 065	64.9 [3.95]	Cont Int [1]	200 [2900] 225 [3262]	10 [145]	Cont Int [1]	135 [1195] 150 [1325]	Cont Int [1]	50 [13] 60 [16]	10
BR 080	80.4 [4.9]	Cont Int [1]	200 [2900] 225 [3262]	10 [145]	Cont Int [1]	190 [1680] 215 [1900]	Cont Int [1]	60 [16] 75 [20]	10
BR 100	99.9 [6.1]	Cont Int [1]	200 [2900] 225 [3262]	10 [145]	Cont Int [1]	230 [2035] 255 [2255]	Cont Int [1]	60 [16] 75 [20]	10
BR 130	125.1 [7.66]	Cont Int [1]	200 [2900] 225 [3262]	10 [145]	Cont Int [1]	295 [2610] 335 [2965]	Cont Int [1]	60 [16] 75 [20]	10
BR 160	159.6 [9.76]	Cont Int [1]	200 [2900] 225 [3262]	10 [145]	Cont Int [1]	310 [2745] 360 [3185]	Cont Int [1]	60 [16] 75 [20]	10
BR 200	199.7 [12.2]	Cont Int [1]	200 [2900] 225 [3262]	10 [145]	Cont Int [1]	390 [3450] 450 [3985]	Cont Int [1]	60 [16] 75 [20]	10
BR 250	249.7 [15.2]	Cont Int [1]	200 [2900] 225 [3262]	7 [100]	Cont Int [1]	490 [4335] 560 [4955]	Cont Int [1]	60 [16] 75 [20]	10
BR 315	314.5 [19.1]	Cont Int [1]	200 [2900] 225 [3262]	7 [100]	Cont Int [1]	470 [4160] 610 [5400]	Cont Int [1]	60 [16] 75 [20]	10
BR 400	392.5 [23.9]	Cont Int [1]	200 [2900] 225 [3262]	5 [75]	Cont Int [1]	510 [4515] 670 [5930]	Cont Int [1]	60 [16] 75 [20]	10

[1] Intermittent operation: the permissible values may occur for max. 10% of every minute.
Oil Viscosity 37 cSt.
For applications at lower rpm or at high radial loads pls. consult Dana SamHydraulik.

Maximun torque values for the different output shafts can be found in page E18

Max. Permissible Shaft Seal Pressure BR

Max. return pressure without drain line or max. pressure in the drain line. Motor are supplied in standard seal version (Standard chart) or in HPS seal version (HPS chart). For pressure and speeds not showed in the curve below, please contact Dana SamHydraulik.

Note: Tachometer or Brake versions is not available with HPS seals.

STANDARD

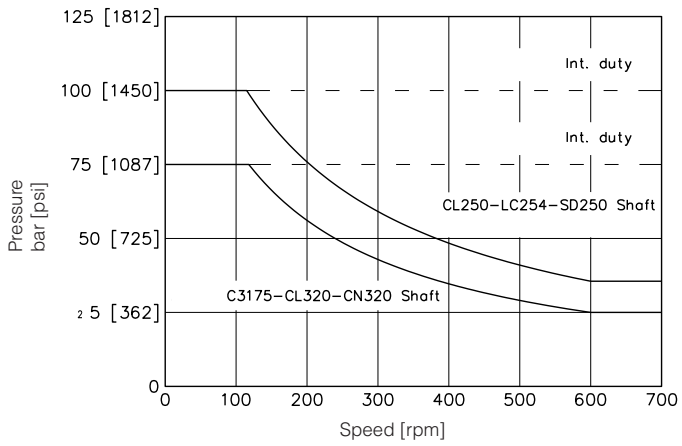

HPS

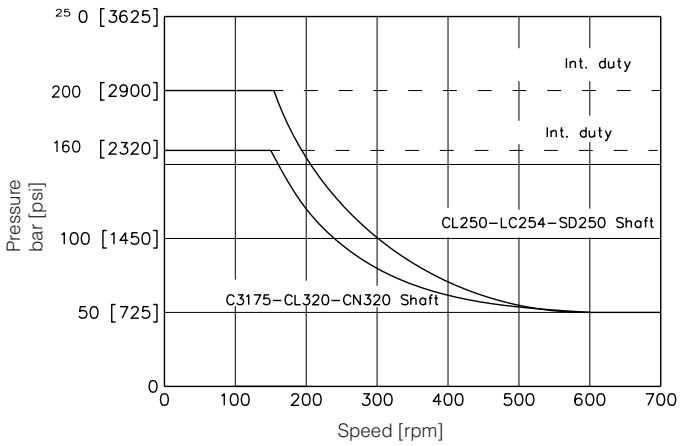

ph = housing pressure
pi = inlet pressure
pr = outlet pressure

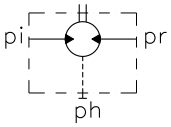

$$ph = \frac{pi + pr}{2} \; [\text{ bar }]$$

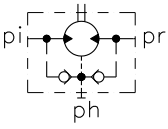

Click *i* button to return to main index

Click **DANA** button to return to section index

Shaft Load BR

The permissibile radial shaft load depends on

- Speed (n)
- Distance (L) from the point of load to the mounting flange
- Mounting flange version
- Shaft version

Radial load capacity (Pr) cur ve according to speed (n) and distance (L) from flange, valid for the 2 -bolt flange type “2A” and 6-bolt flange type “6A”.

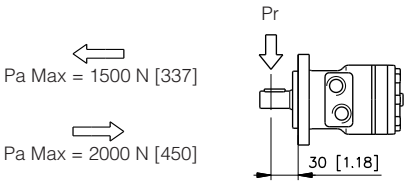

Shafts	2A Flange	6A Flange
CL250 LC254 SD250	$Pr = \frac{800}{n} \bullet \frac{250000}{95 + L}$ [N]	$Pr = \frac{800}{n} \bullet \frac{250000}{95 + L}$ [N]
C3175 CL320 CN320		$Pr = \frac{800}{n} \bullet \frac{187500}{95 + L}$ [N]

This formula being valid for n>= 200 rpm
For n< 200 rpm Prmax = 8000 N [1800 lbf]

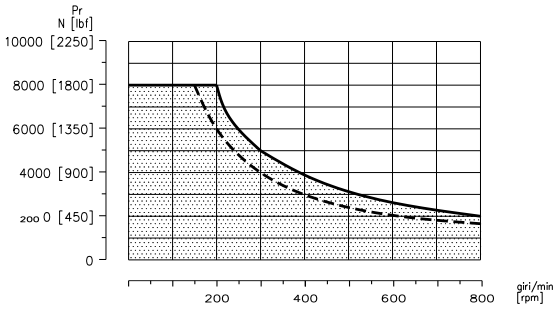

--- For shafts C3175-CL320-CN320
—— For shafts CL250-LC254-SD250

BR - Ordering codes

The following alphanumeric digits system has been developed to identify all of the configuration options for the BR motors.
Use the model code below to specify the desired features. All alphanumeric digits system of the code must be present when ordering.
We recommend to carefully read the catalogue before filling the ordering code.

1	2	3	4	5	6	7	8	9	10	11	12
Series	Displacement	Version	Mount flange	Shaft end	Main port	Seal	Valve	Valve feature	Option	Version feature	Painting
BR	130	O	2A	CL250	M08	N	M081	028	xx	QDR	xx

1

Series	
BR	Orbital motor

2

Displacement	
050	50 cm³/giro [3.05 in³/rev]
065	65 cm³/giro [3.965 in³/rev]
080	80 cm³/giro [4.88 in³/rev]
100	100 cm³/giro [6.1 in³/rev]
130	130 cm³/giro [7.93 in³/rev]
160	160 cm³/giro [9.76 in³/rev]
200	200 cm³/giro [12.2 in³/rev]
250	250 cm³/giro [15.25 in³/rev]
315	315 cm³/giro [19.21 in³/rev]
400	400 cm³/giro [24.4 in³/rev]

3

Version	
O	O Version (standard)
E	E Version

4

Mounting Flange		Version	
		O	E
2A	Oval 2 bolts (standard BR)	●	●
6A	Oval 6 bolts (standard BS)	●	-

● Available
- Not Available

Click **DANA** button to return to section index

Click *i* button to return to main index

5

Shaft end		Version O Flange 2A	Version O Flange 6A	Version E Flange 2A
CL250	Ø25 mm [0.97 in] Parallel keyed (standard BR)	●	●	●
LC254	Ø25.4 mm [1 in] Parallel keyed (standard BS)	●	●	●
C3175	Ø31.75 mm [1.23 in] Parallel keyed	-	●	-
CN320	Tapered Shaft (special on request)	-	●	-
CL320	Ø32 mm [1.24 in] Parallel keyed	-	●	-
SD250	Splined Shaft (SAE 6B 1" 6T spline)	●	●	●
SE250	Splined Shaft (SAE 6B 1" 6T spline)	●	●	●

6

Main Port		Version O	Version E
M08	1/2 G BSPP (40x8) Main Ports (standard BR)	●	-
R08	1/2 G BSPP (36x36) Main Ports	-	●

7

Seal	
N	NBR (standard)
V	FKM (Not available in HPS version)

8

Valve		Main port M08	Main port R08
xxxx	Not required (standard)	●	●
M081	VAF 08 - D pressure relief valve	●	-
M082	VAF 08 - D/AF pressure relief valve	●	-
M083	VAAF 31 anticavitation and Anti-Shock Valve	●	-
M084	AF shuttle-valve	●	-
M085	VCD 08 - S/AF overcentre Valve	●	-
M086	VCR1 08 - D/AF double-acting overcentre valve with shuttle valve	●	-
M087	VCR1 08 D/AF LDP double-acting overcentre valve with shuttle valve	●	-
R081[1]	VAF E8 - D pressure relief valve	-	●
R082[1]	VCD E8 - S/AF overcentre Valve	-	●
R083[1]	1/2 G BSP VCR1 E8 - D/AF double-acting overcentre valve with shuttle valve P (36x36) Main Ports	-	●
R084[1]	VCR1 E8 D/AF LDP double-acting overcentre valve with shuttle valve (36x36) Main Ports	-	●

Valve

[1] Minimum quantity for order 20 pieces

● Available
- Not Available

Click *i* button to return to main index

Click **DANA** button to return to section index

BR - Ordering codes

9

Valve feature		Valve											
		xxxx	M081	M082	M083	M084	M085	M086	M087	R081	R082	R083	R084
000	Feature not necessary (standard)	●	-	-	-	●	-	-	-	-	-	-	-
028	Not Set 30÷70 bar [435 to 1015 psi]	-	●	●	-	-	-	-	-	-	-	-	-
017	Not Set 70÷200 bar [1015 to 2900 psi]	-	●	●	-	-	-	-	-	-	-	-	-
031	Not Set 50÷130 bar [725 to 1885 psi]	-	-	-	●	-	-	-	-	●	-	-	-
021	Not Set 100÷250 bar [1450 to 3625 psi]	-	-	-	●	-	-	-	-	-	-	-	-
020	Not Set 100÷200 bar [1450 to 2900 psi]	-	-	-	-	-	-	-	-	●	-	-	-
425	Pilot Ratio 4.25:1	-	-	-	-	-	-	●	●	-	-	●	●
800	Pilot Ratio 8:1	-	-	-	-	-	-	●	●	-	-	-	-
70D	Pilot Ratio 7:1 - Direction of rotation CW	-	-	-	-	-	●	-	-	-	-	-	-
35D	Pilot Ratio 3.5:1 - Direction of rotation CW	-	-	-	-	-	●	-	-	-	●	-	-
70S	Pilot Ratio 7:1 - Direction of rotation CCW	-	-	-	-	-	●	-	-	-	-	-	-
35S	Pilot Ratio 3.5:1 - Direction of rotation CCW	-	-	-	-	-	●	-	-	-	●	-	-

10

Option	
xx	None

11

Version Feature		Version	
		O	E
QDR	QUAD-RING version with Rear drain 1/4" G (BSPP) (standard BR)	●	●
HPS	High Pressure Seal (without Rear Drain)	●	●
TC1	TAC/U tachometer (with sensor arrangement)	●	●
TC4	TAC/M tachometer	●	-
TC5	TAC/M-E tachometer (with sensor arrangement)	●	-
SV0	Version without built-in check valves + Rear Drain - 1/4" G (BSPP)	-	●
SVH	Version without built-in check valves + High Pressure Seal (without Rear Drain)	-	●
SVA	Version without built-in check valves + High Pressure Seal + Rear Drain - 1/4"G (BSPP)	-	●
FP0	Brake	●	●
DPM	High Pressure Seal + Rear Drain - 1/4" G (BSPP)	●	●

12

Painting	
xx	Not Painted (standard)
01	Black Painted RAL 9005
02	Blue Painted RAL 5015
05	Grey Painted RAL 7016
06	Grey Painted RAL 7015
22	Grey Painted RAL 7035
23	Grey Painted RAL 7036

● Available
- Not Available

Click **DANA** button to return to section index

Click *i* button to return to main index

BR E 2A R08

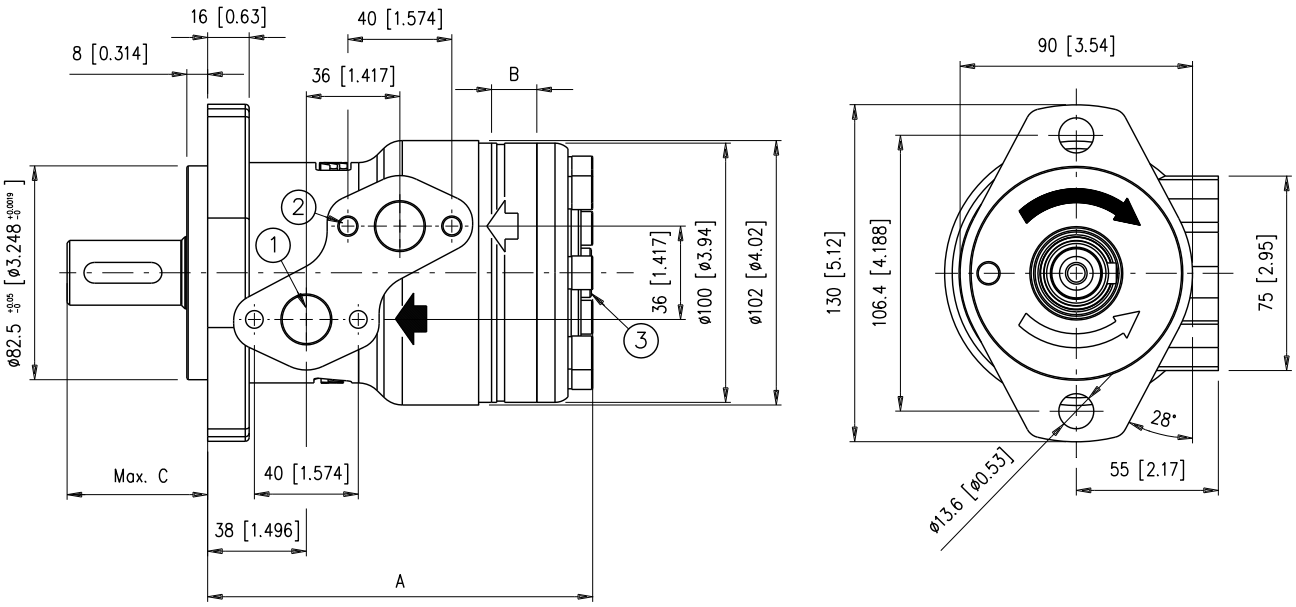

1. No. 2 1/2 G (BSPP) main ports thread depth 15 mm [0.59 in]
2. No. 4 M8 thread depth 15 mm [0.59 in]
3. 1/4 G (BSPP) drain motor thread depth 12 mm [0.472 in] (not in HPS version)

For shafts dimensions see page E18

SHAFT		CL250	SD250
C	mm [in]	54 [2.12]	54 [2.12]

		BR E 050	BR E 065	BR E 080	BR E 100	BR E 130	BR E 160	BR E 200	BR E 250	BR E 315	BR E 400
A	mm [in]	139.8 [5.50]	144.8 [5.70]	148.2 [5.83]	152.6 [6.01]	158.6 [6.24]	165.6 [6.52]	174.3 [6.86]	185.6 [7.31]	199.2 [7.84]	142.1 [5.59]
B	mm [in]	9 [0.354]	11.3 [0.444]	14 [0.551]	17.4 [0.68]	21.8 [0.85]	27.8 [1.09]	34.8 [1.37]	43.5 [1.71]	54.8 [2.15]	68.38 [2.69]
Weight	kg [lb]	7.2 [15.8]	7.4 [16.3]	7.5 [16.5]	7.7 [16.9]	8 [17.6]	8.3 [18.2]	8.6 [18.9]	9.1 [20]	9.8 [21.5]	10.1 [22.2]

CL250 Cylindrical Shaft

Max Torque Continuous 300 Nm [221.1 lbf·ft]

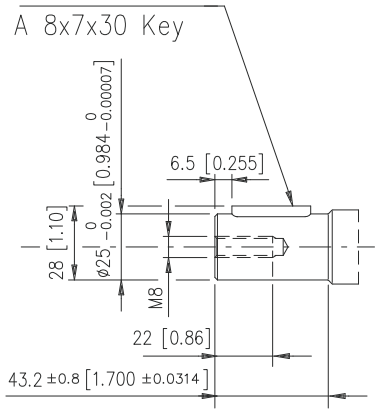

LC254 Cylindrical Shaft

Max Torque Continuous 300 Nm [221.1 lbf·ft]

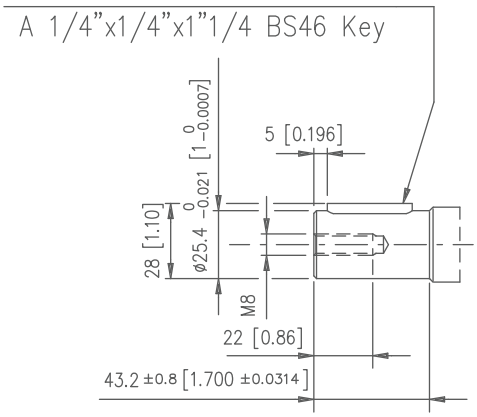

SD250 Splined Shaft

Max Torque Continuous 360 Nm [265.32 lbf·ft]

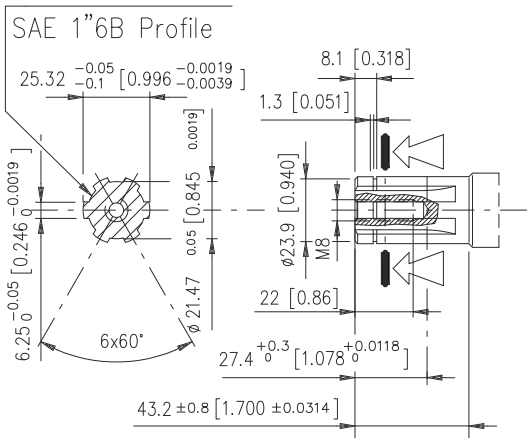

CL320 Cylindrical Shaft

Max. Torque Continuos 768 Nm [566 lbf·ft])

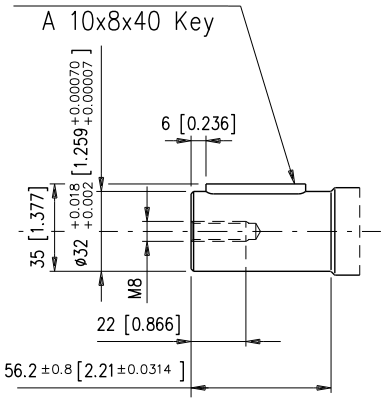

C3175 Cylindrical Shaft

Max. Torque Continuos 768 Nm [566 lbf·ft])

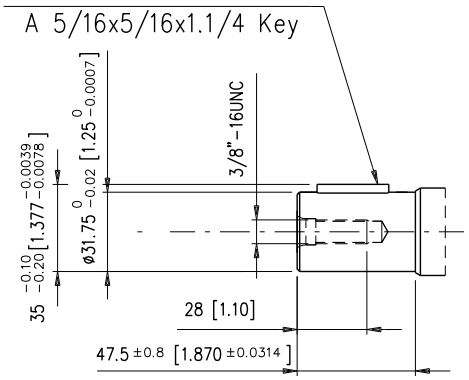

CN320 Tapered Shaft

Max Torque Continuous 860 Nm [633.82 lbf·ft]

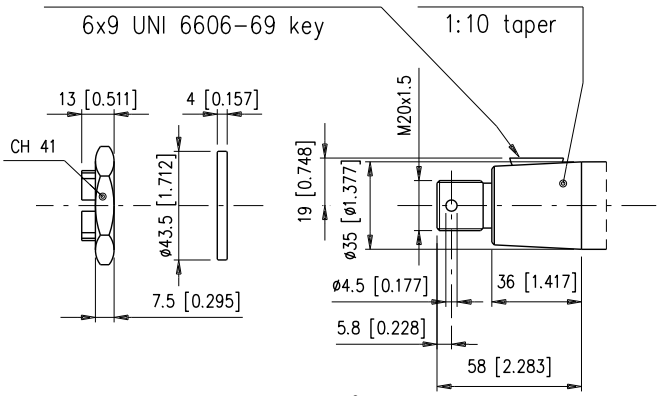

Click **DANA** button to return to section index

Click *i* button to return to main index