FZP series

Maximum working pressure up to 42 Mpa (420 bar) - Flow rate up to 160 l/min



INSTALLATION, SERVICE AND MAINTENANCE MANUAL AND SAFETY INSTRUCTIONS

Please scan or click the QR codes to get updated electronic version of the related document.

FZP039 FZP136

For all the QR codes: Scan or click me!

FZP GENERAL INFORMATION

Description

Stainless steel high pressure filters

In-line
Maximum working pressure up to 42 Mpa (420 bar)
Flow rate up to 160 l/min

FZP is a range of stainless steel high pressure filter for protection of sensitive components in high pressure hydraulic systems placed in difficult environmental conditions.
They are directly connected to the lines of the system through the hydraulic fittings.

Available features:

- 1 1/4" female threaded connections, for a maximum flow rate of 160 l/min
- Fine filtration rating, to get a good cleanliness level into the system
- Bypass valve, to relieve excessive pressure drop across the filter media
- Low collapse filter element with external support "R", for filter element protection against the back pressure caused by the check valve or the reverse flow in filters provided with the bypass valve
- High collapse filter element with external support "S", for filter element protection against the back pressure caused by the check valve or the reverse flow in filters not provided with the bypass valve
- High collapse filter element "U", for use with aggressive fluids
- Visual, electrical and electronic differential clogging indicators

Common applications:

- Off-shore equipment
- Water filtration systems
- Systems with strong or corrosive environmental conditions
- Systems with corrosive fluids

Technical data

Filter housing materials

- Head: AISI 316L
- Housing: AISI 316L
- Bypass valve: AISI 316L

Pressure

- Test pressure: 63 MPa (630 bar)
- Min. Burst pressure: 126 MPa (1260 bar)
- Pulse pressure fatigue test: 1 000 000 cycles with pressure from 0 to 42 MPa (420 bar)

Bypass valve

Opening pressure 6 bar ±10%

Filter element features

Filter		Filter element	
FZP		HP	
Δp Element type			
Element media	**Construction**	**Δp Series**	**Δp**
A - Microfiber	with external support	R	20 bar
	High Δp with external support	S	210 bar
	High Δp with stainless steel components	U	210 bar
Please see ordering code tables to check element Δp series availability based on filter features.			
Flow direction through the filter element: From OUT to IN			

Filter element components materials	Δp Series		
	R	S	U
End cap	Polyamide	Tinned Steel	Stainless steel
Core tube	Tinned Steel	Tinned Steel	Stainless steel
External support	Wire mesh epoxy painted	Wire mesh epoxy painted	Stainless steel
Internal support	Wire mesh epoxy painted	Stainless steel	Stainless steel
Pre-filter	Synthetic	Synthetic	Synthetic

Seals

- Standard NBR series A (-25 °C to +110 °C)
- Optional FPM series V (-20 °C to +120 °C)
- Optional MFQ series F (-50 °C to +120 °C)

Temperature

From -50 °C to +120 °C

Note

FZP filters are provided for vertical mounting

Weights [kg] and volumes [dm³]

Filter series	Weights [kg]					Volumes [dm³]				
	Length	1	2	3	4	Length	1	2	3	4
FZP 039		-	4.5	5.1	5.6		-	0.19	0.26	0.34
FZP 136		8.3	10.2	11.5	-		0.45	0.78	1.00	-

Flow rates [l/min]

		Filter element design - R Series					Filter element design - S-U Series				
Filter series	Length	A03	A06	A10	A16	A25	A03	A06	A10	A16	A25
	2	19	25	43	50	59	19	23	41	45	55
FZP 039	**3**	34	37	53	62	74	31	34	48	52	66
	4	42	46	63	72	81	38	41	55	71	78
	1	63	67	102	108	136	47	53	87	89	127
FZP 136	**2**	95	100	122	123	159	81	95	113	115	138
	3	122	124	148	150	160	106	116	135	141	151

Maximum flow rate for a complete stainless steel high pressure filter with a pressure drop Δp = 1.5 bar.
The reference fluid has a kinematic viscosity of 30 mm^2/s (cSt) and a density of 0.86 kg/dm^3.
For different pressure drop or fluid viscosity we recommend to use our selection software available on www.mpfiltri.com.
You can also calculate the right size using the formulas present on the FILTER SIZING paragraph at the beginning of the full catalogue or at the beginning of the filter family brochure.
Please, contact our Sales Department for further additional information.

Hydraulic diagram

Filter series	Style S	Style B	Style T	Style D	Style V	Style Z
FZP 039	•	•	•	•	•	•
FZP 136	•	•	-	-	-	-

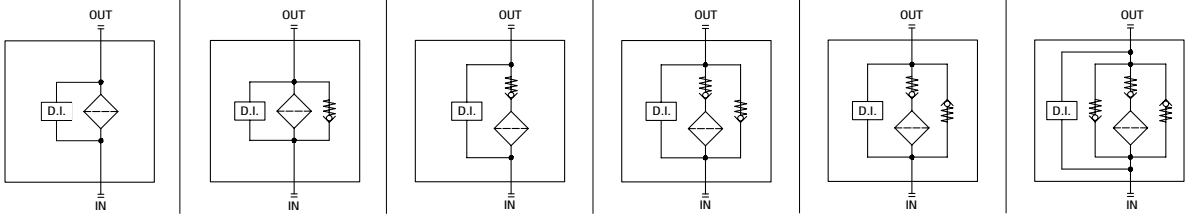

Pressure drop

Filter housings Δp pressure drop

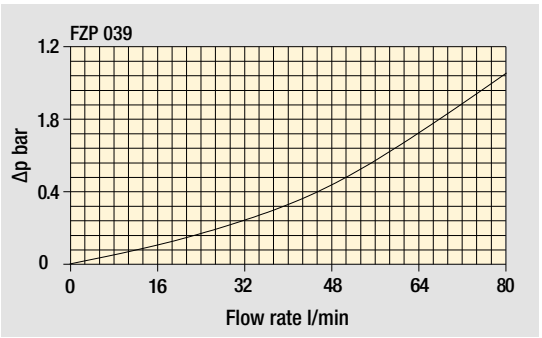

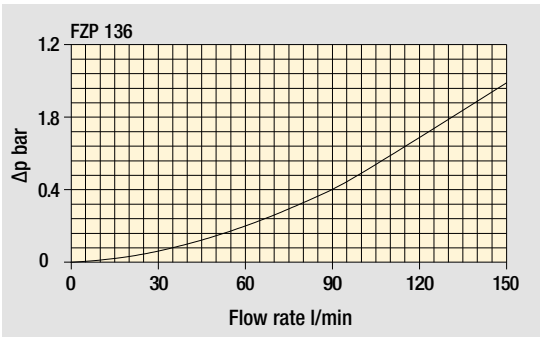

The curves are plotted using mineral oil with density of 0.86 kg/dm^3 in compliance with ISO 3968. Δp varies proportionally with density.

Designation & Ordering code

COMPLETE FILTER

Configuration example: FZP039 | 2 | B | F | B | 2 | A03 | U | P01

Series and size
FZP039

Length
2 | **3** | **4**

Valves
S Without bypass
B With bypass 6 bar
T With check valve, without bypass
D With check valve, with bypass 6 bar
V With reverse flow, without bypass
Z With reverse flow, with bypass 6 bar

Seals
A NBR
V FPM
F MFQ

Connections
A G 1/2”
B 1/2” NPT
C SAE 8 - 3/4” - 16 UNF

Connections for differential pressure indicators
1 Without connection
2 With connection

Filtration rating (filter media)
A03 Inorganic microfiber 3 µm
A06 Inorganic microfiber 6 µm
A10 Inorganic microfiber 10 µm
A16 Inorganic microfiber 16 µm
A25 Inorganic microfiber 25 µm

Element Δp		Valves S	B	T	D	V	Z
R	20 bar	-	•	-	•	-	•
S	210 bar	•	-	•	-	•	-
U	210 bar, stainless steel filter element	•	•	•	•	•	•

Execution
P01 MP Filtri standard
Pxx Customized

FILTER ELEMENT

Configuration example: HP039 | 2 | A03 | F | U | P01

Element series and size
HP039

Element length
2 | **3** | **4**

Filtration rating (filter media)
A03 Inorganic microfiber 3 µm
A06 Inorganic microfiber 6 µm
A10 Inorganic microfiber 10 µm
A16 Inorganic microfiber 16 µm
A25 Inorganic microfiber 25 µm

Seals
A NBR
V FPM
F MFQ

Element Δp		Valves S	B	T	D	V	Z
R	20 bar	-	•	-	•	-	•
S	210 bar	•	-	•	-	•	-
U	210 bar, stainless steel filter element	•	•	•	•	•	•

Execution
P01 MP Filtri standard
Pxx Customized

CLOGGING INDICATORS

See page 787

DEX Electrical differential pressure indicator
DLX Electrical/visual differential pressure indicator
DVX Visual differential pressure indicator
DVY Visual differential pressure indicator

PLUGS

See page 807

X2 Stainless steel plug (not included)

Dimensions

FZP039	
Filter length	**H [mm]**
2	179
3	222
4	266

Connections	R
A	M6
B - C	1/4" UNC

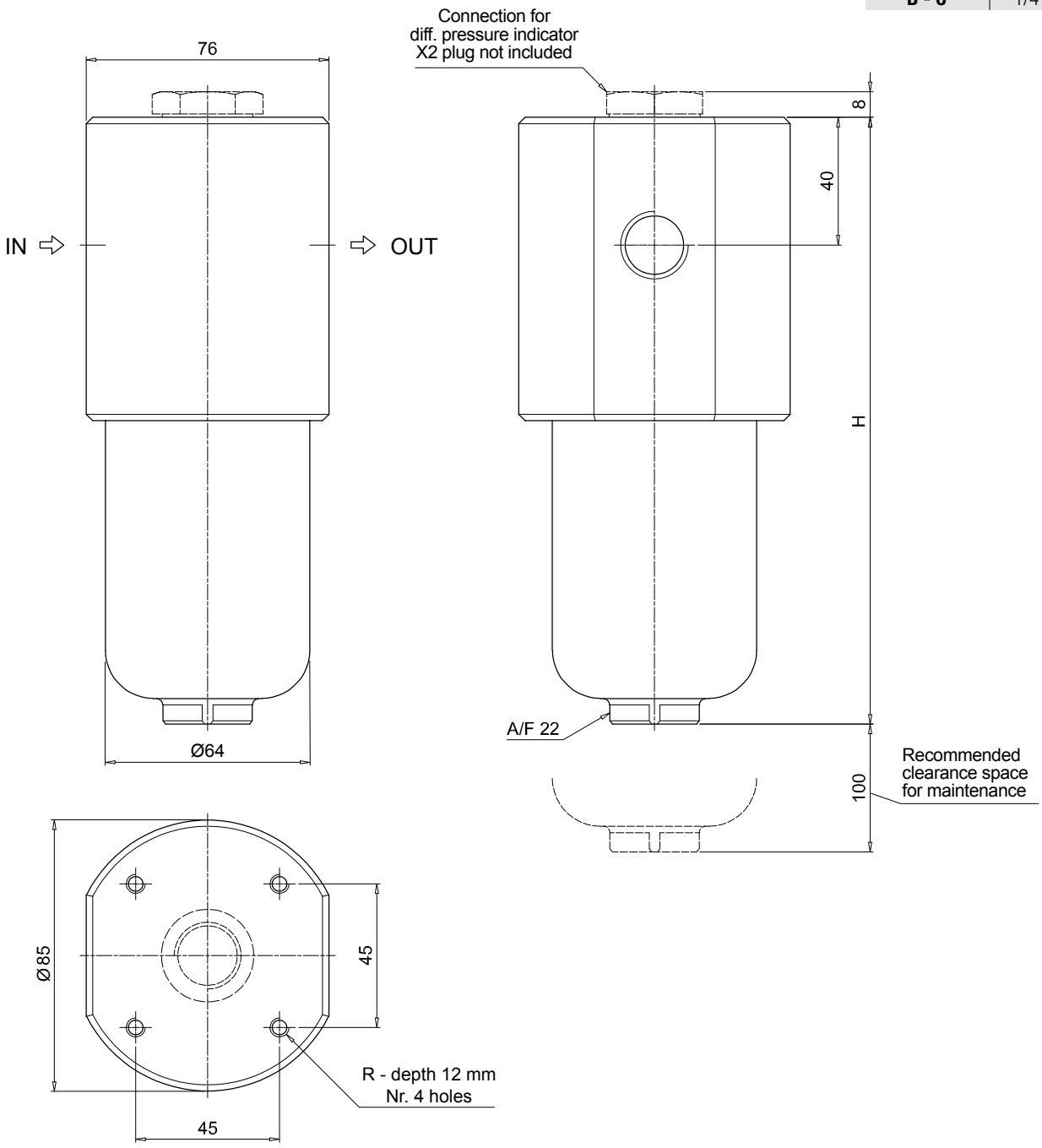

Order number for spare parts

FZP 039

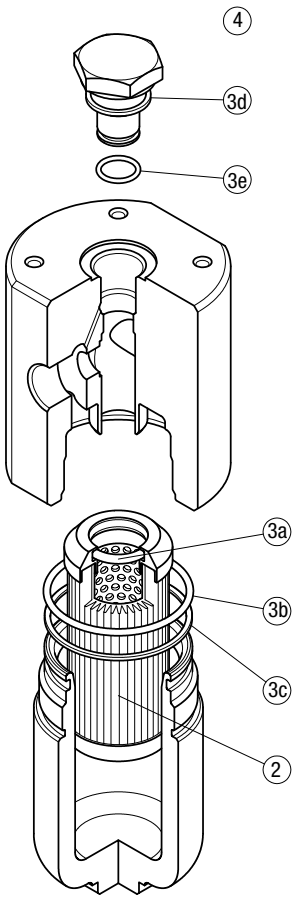

FZP 136

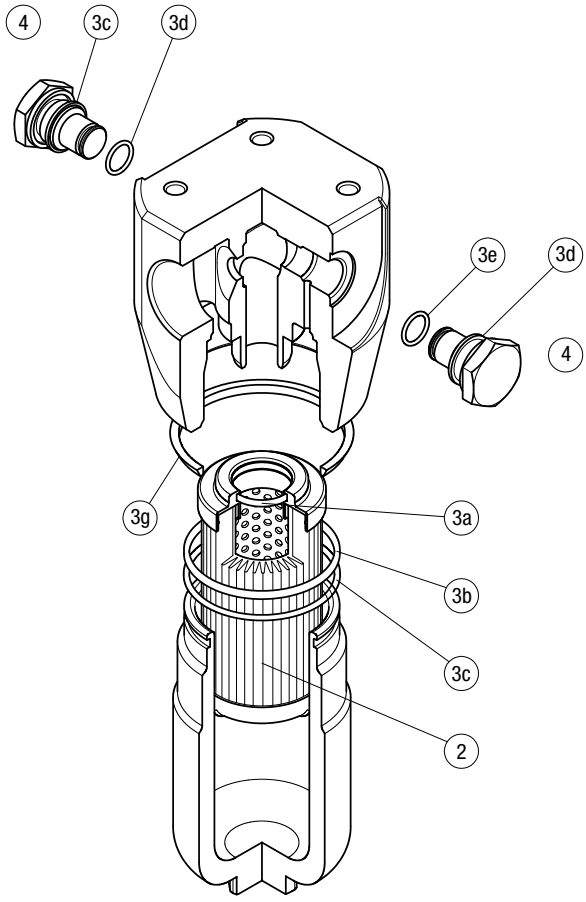

Item:	Q.ty: 1 pc. (2)	Q.ty: 1 pc. (3) (3a ÷ 3g)		Q.ty: 1 pc. (4)	
Filter series	**Filter element**	**Seal Kit code number NBR**	**FPM**	**Indicator connection plug NBR**	**FPM**
FZP 039	See order table	02050299	02050300	X2H	X2V
FZP 136		02050636	02050637		