ICM 2.0

In-Line Contamination Monitor



INSTALLATION, SERVICE AND MAINTENANCE MANUAL AND SAFETY INSTRUCTIONS

Please scan or click the QR codes
to get updated electronic version
of the related document.

Scan or click me!

ICM 2.0 GENERAL INFORMATION

Description

Contamination Monitoring Products

In-Line Contamination Monitor

The ICM 2.0 automatically measures and displays particulate contamination, moisture and temperature levels in various hydraulic fluids. It is designed specifically to be mounted directly to systems, where ongoing measurement or analysis is required, and where space and costs are limited.

Features & Benefits

- 8 channel contamination measurement & display
- Measures and displays the following international standard formats; ISO 4406, NAS 1638, AS 4059E&G, GBT 14039, GJB420B, GOST 17216, ISO 11218
- Moisture and temperature sensing fluid dependent
- Data logging and 4000 test result memory
- Manual, automatic and remote control flexibility
- Multicolour indicators via LCD (K versions) and LED with output alarm signals as standard
- Robust die cast aluminium construction
- CMP View Software (included)
- Pressure max. 420 bar
- Environmental protection IP65/67 versatile
- Secondary connector to allow the simultaneous control/download of results during operation
- Option available to download all results onto a USB stick, direct from the ICM
- RS485, Modbus, CANbus and 4-20mA analogue output as standard

Status LED

All ICM 2.0 versions have a multicolour indicator on the front panel, which is used to indicate the status or alarm state. ICM-K versions also have a screen that changes colour. The alarm thresholds can be set from CMP View.

Screen and multicolor indicators

- Green indicates that the test result passed, i.e. none of the alarm thresholds were exceeded
- Yellow indicates that the lower cleanliness limit was exceeded, but not the upper one
- Red indicates that the upper clean liness limit was exceeded
- Blue indicates that the upper water content limit was exceeded
- Red/Blue Alternating indicates both cleanliness and water content upper limits exceeded
- Violet indicates that the upper temperature limit was exceeded



Left facing view



Right facing view


Top view with USB port



Bottom view

Technical data

Technology
LED based light extinction
automatic optical contamination monitor

Particle Sizing
>4, 6, 14, 21, 25, 38, 50, 70 $\mu m_{(c)}$

Analysis range
ISO 4406 Codes 8 to 24
NAS 1638 Class 2 to 12
AS4059/ISO 11218 Rev E, Table 1 Size Codes 2-12
AS4059/ISO 11218 Rev E, Table 2 Size Codes, A: 000 TO 12, B: 00 to 12, C: 00 to 12, D: 2 to 12, E: 4-12, F: 7 to 12
AS4059 Rev G, Table 1 Size Codes 2-12
AS4059 Rev G, Table 2 Size Codes cpc
[000 to 12, 00 to 12, 00 to 12, 2 to 12, 4 to 12, 7 to 12]
GBT14039 Codes 8-24
GJB420B Size Codes, A: 000 to 12, B: 00 to 12, C: 00 to 12, D: 2 to 12, E: 4-12, F: 7 to 12
GOST 17216
ISO 11218

Please Note: Lower Limits are Test Volume dependent

Accuracy
± 1/2 ISO code for 4, 6, 14 $\mu m_{(c)}$
±1 code for 21, 25, 38, 50, 70 $\mu m_{(c)}$

Calibration
Individually calibrated with ISO Medium Test Dust (MTD) based on ISO 11171, on equipment certified by I.F.T.S. ISO 11943

Operating Flow Rate
20 - 400 ml/min (0.005 - 0.1 gpm/min)

Viscosity range
Up to 1000 cSt

Fluid temperature
From -25 °C to +80 °C (from -13 °F to +176 °F)

Ambient Temperature
Non K version: from -25 °C to +80 °C (from -13 °F to +176 °F)
K version: from -25 °C to +55 °C (from -13 °F to +131 °F)

Pressure
Maximum: 420 bar / 6092 psi

Test time
Adjustable 10 - 3600 seconds. Factory set to 120 seconds.
Start delay & programmable test intervals available as standard

Flow rate measurement
Indicator only

Moisture Sensing
% RH (Relative Humidity) ±3%

Temperature Measurement
±3 °C

Data Storage
Up to 4000 tests

Communication options
RS485, MODBUS, CANBUS, 4-20mA time multiplex as standard

Relays
Two solid state relays fitted to “R” version for output to alarm circuits

Environmental Protection
IP 65/67 versatile IK04 Impact Protection

Weight
1.6 kg (3.5 lb)

Dimensions
Width 142 mm (5 19/32”)
Height 123 mm (4 27/32”)
Depth 65 mm (2 9/16”)

Supply Voltage
9 - 36 Vdc

Power consumption
<2.2 W

Outer Casing Finish
Polyurethane BS X34B. Colour BS381-638 (Dark Sea Grey)
Industry 4.0 ready with appropriate accessory product

Wetted parts
M - C46400 Cu alloy, 316 stainless steel, PTFE, FR4, Sapphire, FPM
N - 316 stainless steel, FPM, Sapphire, FPM
S - 316 stainless steel, PTFE, FFKM, sapphire, FR4

Software
CMP View software (included)

ICM 2.0 is supplied with a full software package and digital product information

Scope of Supply
- 1 x ICM 2.0 (Specific model will be as per ordered item)
- 1 x 3m Twisted Pair Cable Assembly
- 1 x Hard copy Quick start/wiring installation guide
- 1 x Hard copy Fluid Condition Handbook
- 1 x Digital copy of user guides/software/drivers
- 2 x Hard copy of calibration certificate

CMP View Software

Our new CMP View software is used with all MP Filtri CMP devices.
When connected to CMP View, MP Filtri CMP devices can transfer results in realtime, or alternatively, historical results can be downloaded from each device's in-built memory.

- Windows compatible
- Included free with CMP Products
- Brand new design, created in-house for ease of use
- Comprehensive functionality
- Can be mastered quickly without the need for formal training
- Key results and data available at-a-glance
- Full adjustment and control of product settings, test times and alarms
- Easy test report generation
- Full trend analysis
- Universal format across our contamination monitoring product range
- Multi-machine monitoring





Compatible with **CMP View**

Hydraulic Circuit

TYPICAL PRESSURE LINE

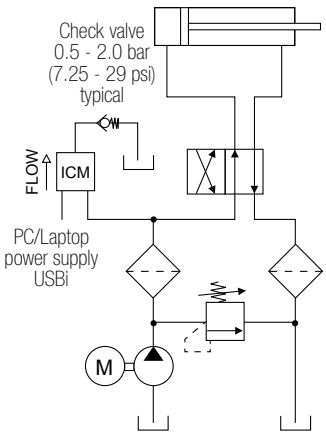

TYPICAL RETURN LINE

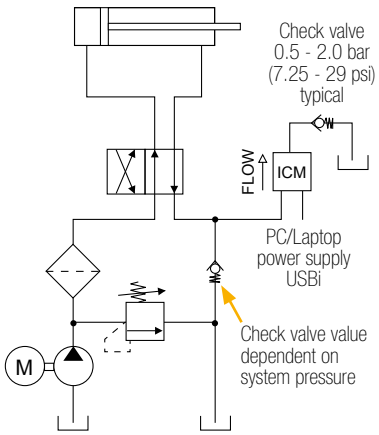

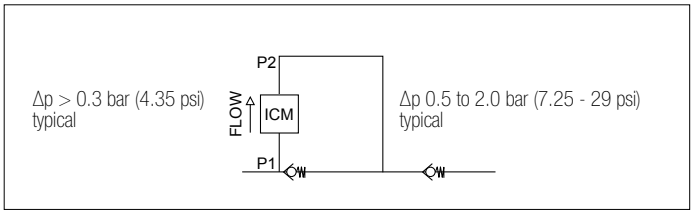

Dimensions

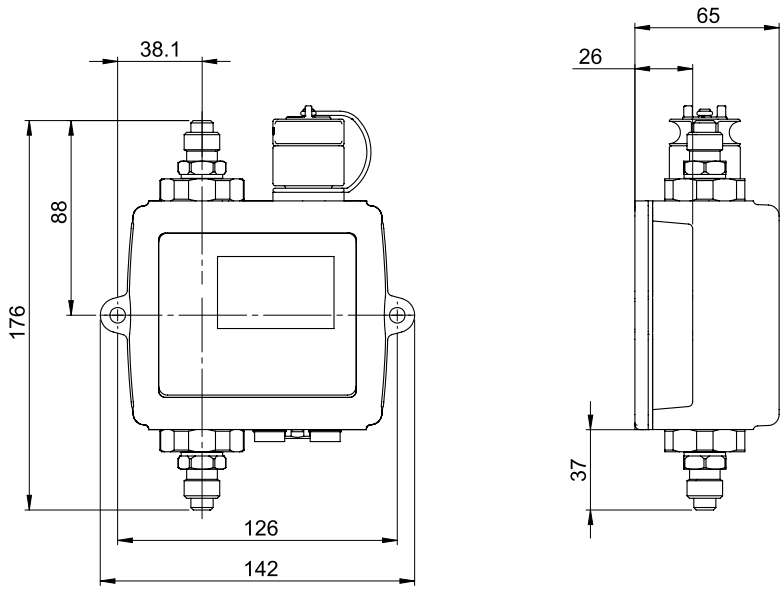

Designation & Ordering code

CONTAMINATION MONITORING ICM 2.0

Configuration example: ICM | W | M | K | R | G1 | 2.0

Series
ICM In-Line Contamination Monitor

Moisture Sensor (RH%)
0 Without moisture and temperature sensor
W With moisture and temperature sensor

Fluid compatibility
M Mineral/synthetic oils
N Subsea fluids and water based fluids (*)
S Phosphate ester and aggressive fluids

Keypad / Display
0 Without keypad / display
K With keypad / display

Device output
R With relays / external alarm outputs
U Test record transfer (direct to USB stick) plus relays/external alarm outputs

Connections
G1 ICM complete with M16x2 pressure test point connections fitted
G3 1/4" BSP - Female port
G4 7/16" UNF - Female port

Series
2.0

(*) **N** version, moisture sensor (W) not available