Indexreferenz / Dateiname: \\NTTSRV02\zentrale_ablage\Zeichnungen\A1T027PH11U0000.asm

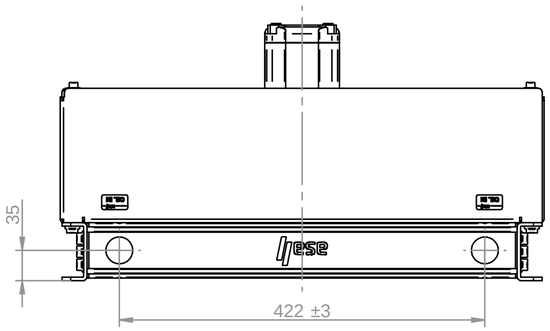

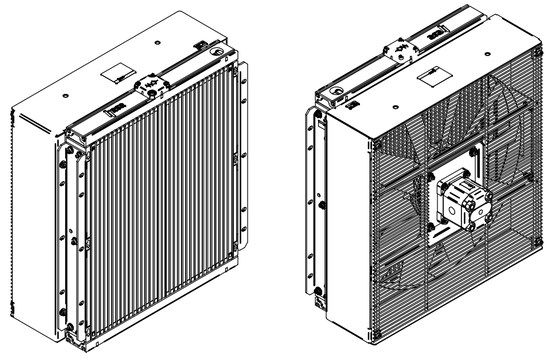

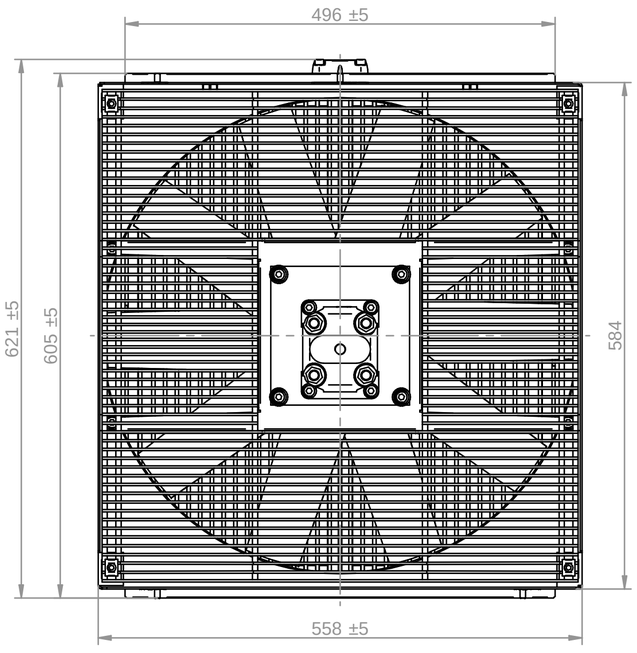

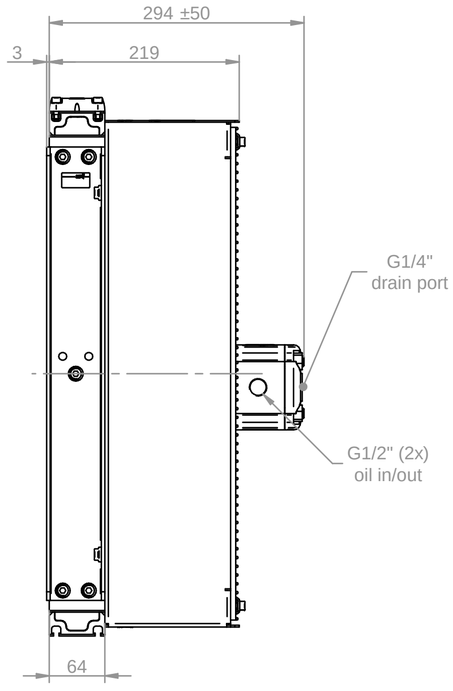

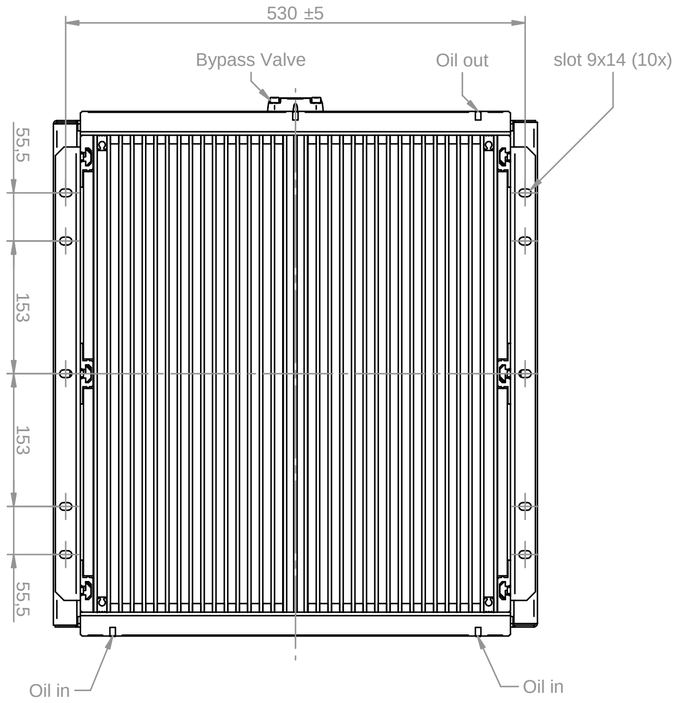

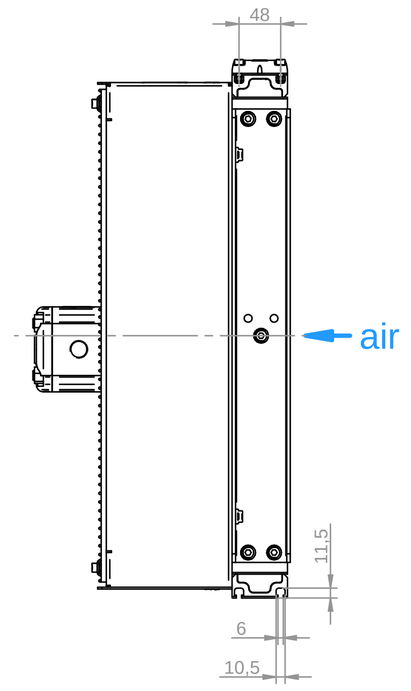

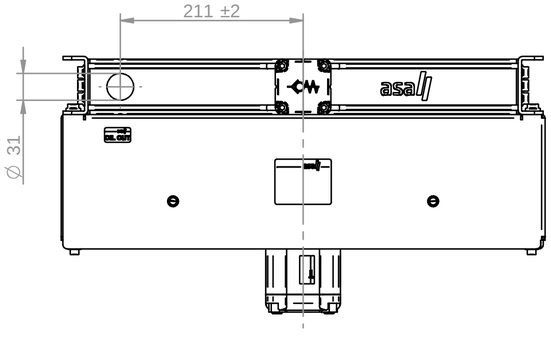

Description

The ***asa*** rail system is the world's first flexible mounting and connection system for air blast heat exchangers. Its flexibility stems from the freedom to choose the direction of the ports. Each radiator port has three possible orientations. This introduces another innovative feature to the standard cooler market: The oil flow direction can be chosen as either U-flow or diagonal oil flow on each 1T rail cooler.

The radiator rail slots are not only for connecting the hydraulic ports; the system can also be used to attach bypass systems, filters, measurement devices and much more. Please contact us to discover the huge potential of this rail system for your application.

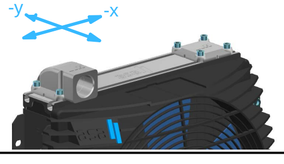

Limit for imperfections in welding joints according to ISO 10042, quality level "D".
This is, especially but not exclusively, true for weld upsets (ref. No. 502 according to ISO 6520).

* Depending on the brand of the motor, this dimension may vary more than stated in the drawing.

This drawing and attached written disclosure, if any, is our intellectual property and must not be used or disclosed to third parties without our explicit consent. All rights reserved. *Diese Unterlage ist unser Eigentum und darf ohne unsere Zustimmung nicht verwendet oder an Dritte weitergegeben werden. Alle Rechte vorbehalten.*
asa technology Produktions-und Vertriebs GmbH A-1210 Wien

free size tolerance:	customer:
DIN ISO 2768-vL	

index	modification	date	name

	date	name
drawn	13.10.25	MA
check std.	13.10.25	ML
check QM	13.10.25	NM
review.	13.10.25	MN
release	13.10.25	JF

asa

scale: 1:5 | weight: 33 kg

item number(s):
A1T027PH11U0000

description:
Oil/Air cooler ASA 1T 027
Hydraulic Bypass

documentary list: yes ☐ no ☐

drawing number: A-07210-00

page 1 of 1 pgs.

A-07210-00