Beta Marine are an ISO Quality Assured Firm. Since 1987, we have been continually improving our Quality Procedures, whilst being monitored annually by ISO Quality Services Ltd.

BETA MARINE

Seagoing | Engine Data Sheet - Beta 90T

Mid Engine Range - Specifications

4 cylinders with high inertia flywheel for smooth running at low rpm.

Heater plugs for cold starting below 5°C, fuel filter, **MECHANICAL** fuel lift pump, **MECHANICAL** fuel injection pump and **MECHANICAL** engine governing ensures steadfast performance regardless of ambient conditions.

QUIET GEAR DRIVEN CAMSHAFT for maximum engine reliability and reduced servicing, as no timing chains or toothed belts have to be replaced.

Subject to criteria, Kubota based engines accommodate installation angles up to 15° maximum when static and 25° when heeling.

70 amp battery charging alternator giving full power at cruising speed with 12 volt electric starting as standard. **OPTIONAL OR ADDITIONAL ALTERNATORS** & polyvee belt/pulley drive transmission are available.

Optional special feet service, to ease planning and installation Beta Marine offer 3D computer aided modeling for the design & the manufacture of bespoke feet to allow direct installation on to your vessels existing engine bearers.

Mechanical & hydraulic, in-line, down angle or V drive gearbox options. Output rotation is clockwise in ahead, viewed from the gearbox end.

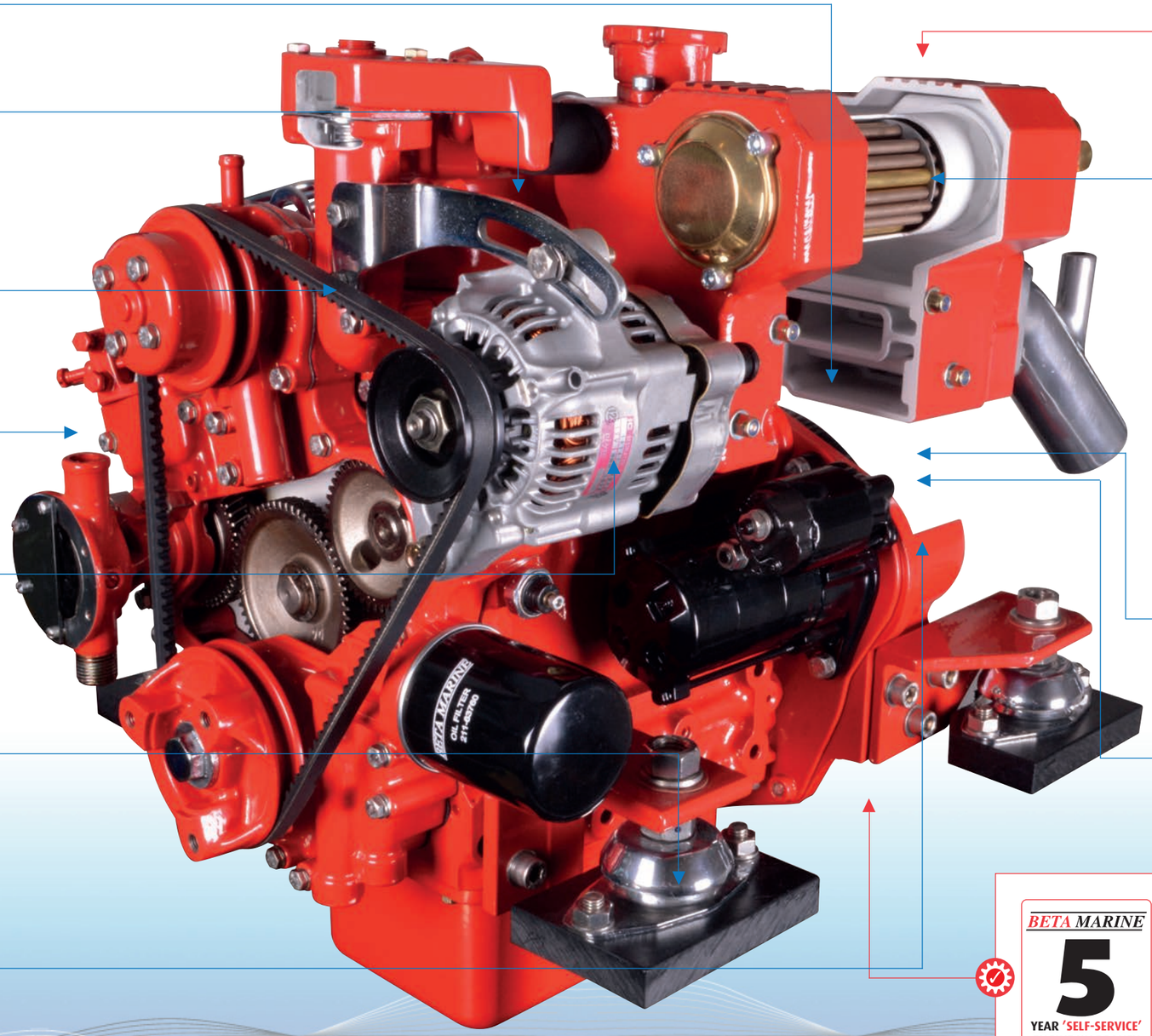

Complete with "ABV" Control Panel & 3m of interconnection cable, "Morse" type engine speed and gearbox control brackets & end fittings. Heavy duty feet and flexible mountings.

HEAT EXCHANGER COOLED, the Beta 43, 50, 60 & 75 are naturally aspirated, whilst the Beta 70T, 85T, 90T, 105T & 115T are turbocharged.

Three vortex combustion with indirect injection for quiet running, low emissions and excellent fuel consumption – Beta 43, 50, 60, 75 & 90.

ICVS combustion with direct injection for quiet running, low emissions and excellent fuel consumption – Beta 70T, 85T, 90T & 105T.

BETA MARINE
5
YEAR 'SELF-SERVICE' ENGINE WARRANTY

Subject to installation criteria & registration, Kubota based engine`s used for recreational use benefit from a **5 YEAR 'SELF-SERVICE' ENGINE WARRANTY**.

Cutaway Images Are For Illustration Purposes & Not Necessarily Representative

Beta 90T

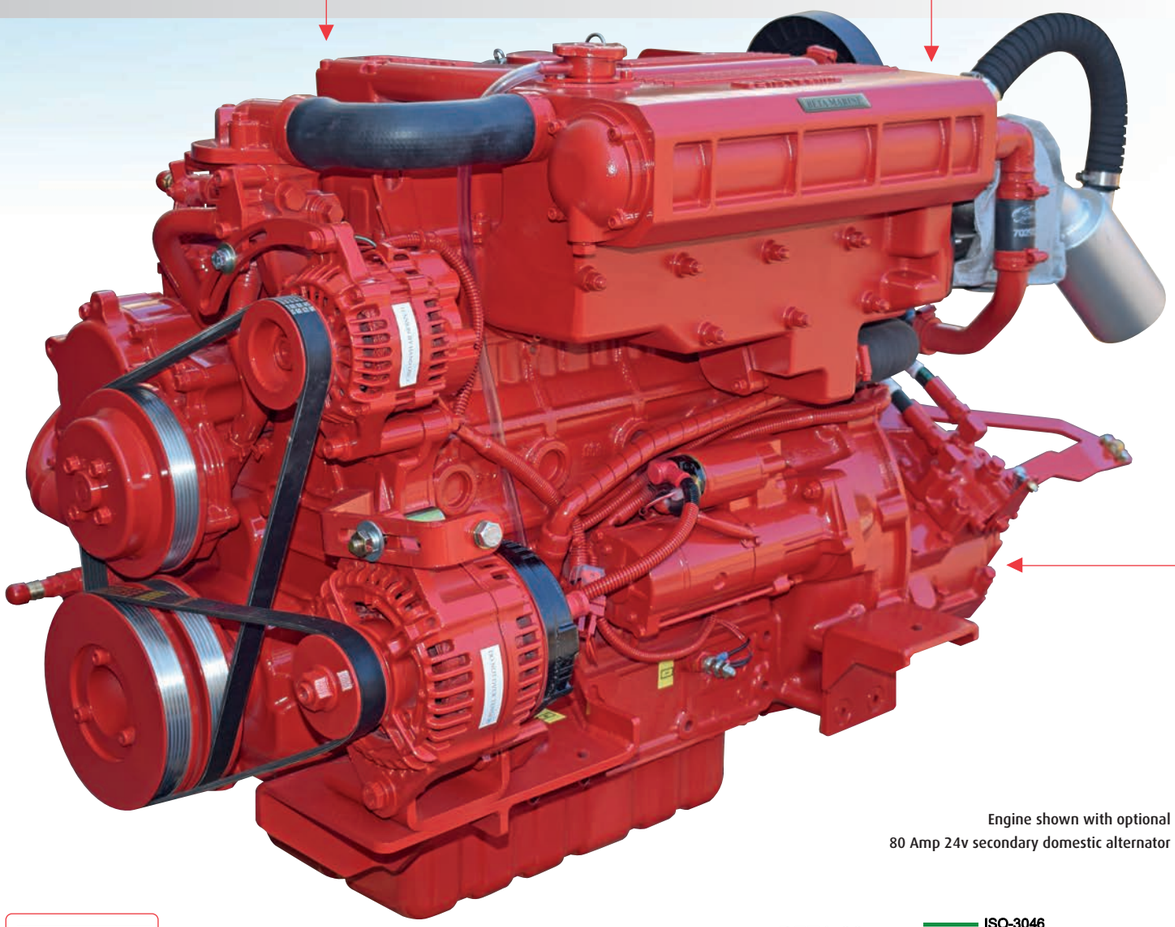

Engine shown with optional
80 Amp 24v secondary domestic alternator

Control Panel Options

ABV Panel	Std.
ABVW Panel	Opt.
B Panel	Opt.
BW Panel	Opt.
C Deluxe Panel	Opt.
CW Deluxe Panel	Opt.
D Digital Panel	Opt.
Flybridge Control - Additional C Panel & 6m Connection Cable	Opt.

Electrical Options

70 Amp, 12 Volt Alternator	Std.
120 Amp, 12 Volt Alternator in Lieu of Standard	Opt.
175 Amp, 12 Volt Alternator in Lieu of Standard	Opt.
70 Amp, 12 Volt Insulated Return Alternator	Opt.
100 Amp, 12 Volt Insulated Return Alternator	Opt.
175 Amp, 12 Volt Secondary Domestic Alternator	Opt.
24 Volt Electric Start and 55 Amp Alternator	Opt.
80 Amp, 24 Volt Secondary Domestic Alternator	Opt.
60 Amp, 24 Volt Secondary Domestic Insulated Return Alternator	Opt.
3.5 kVA Travel Power - 230 Volt, Single Phase 50Hz	Opt.
5.0 kVA Travel Power - 230 Volt, Single Phase 50Hz	Opt.

Gearbox Options

Bobtail - No Gearbox	
"Bobtail" Engine with Drive Plate and Housing Only	Std.
Technodrive / Twin Disc	
TM93 - Hydraulic	Std.
TM93A - 8° Down Angle, Hydraulic	Opt.
PRM Marine	
PRM280 - Hydraulic	Std.
PRM260C - In-line Hydraulic	Opt.
PRM500 - Hydraulic	Opt.
ZF	
ZF45 - Hydraulic	Std.
ZF45A - 8° Down Angle, Hydraulic	Std.
ZF68IV - 12° V Drive, Hydraulic	Std.

BETA MARINE
5
YEAR 'SELF-SERVICE' ENGINE WARRANTY
Recreational use only

Kubota Base Engine

Cylinders	4
Displacement	3620cc
Power	90hp max @ 2,600rpm
Weight	425Kg
Propeller	AIA*

A general guidance for propeller size in inches, based upon 3 blade RH rotation and reduction ratio of 2:1. *For accurate individual advice please provide us with your vessels current full specifications

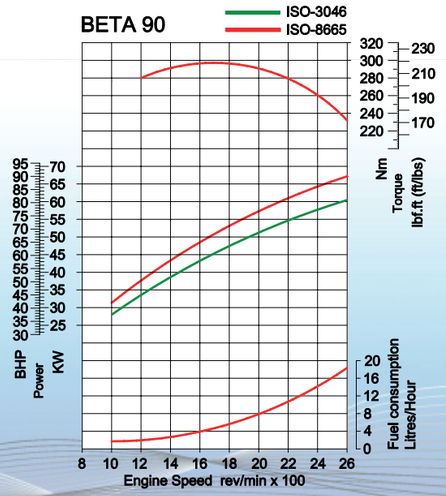

Based on theoretical propeller loading - matched at full speed

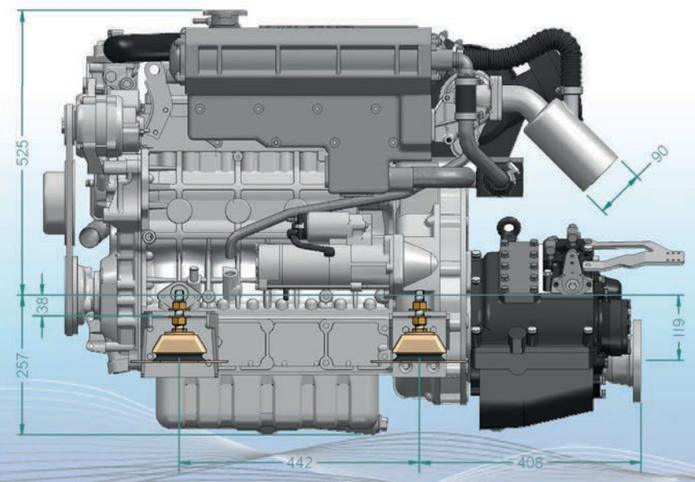

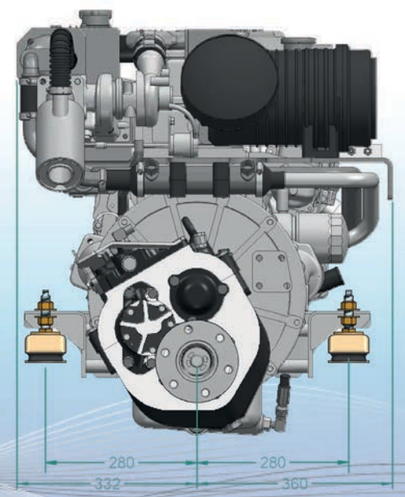

These are typical dimensions: visit our website for all engine / gearbox option drawings or contact Beta Marine direct

Beta Marine Ltd operates a policy of continuous improvement and reserves the right to change prices & specification without prior notification. Information given is subject to our current conditions of tender & sale.