LVK series

Electrical and visual oil level indicator



Technical data

Electrical Oil Level Indicators

LVK is a range of electrical and visual fluid level indicators for monitoring of the fluid level into the tank. They are directly fitted on the tank side. The float moves through the indicator housing while the fluid level changes.

Available features:
- Several male threaded connections
- Three different sizes, to meet every size of tank
- Thermometer, thermostat or PT100, to check the temperature of the fluid

Common applications:
- Hydraulic systems
- Mobile machines
- Industrial equipment

Electrical symbol:
see page. 118

Materials
- Head: Polyamide
- Screws: Nickel plated brass (standard), AISI 314 (optional)
- Seal: NBR (standard)
- Float: Polyamide
- Sensor thermometer: Screw + thermometer

Temperature
From -20 °C to + 80 °C

Weight
LVK 10 0.140 kg
LVK 20 0.170 kg
LVK 30 0.250 kg



Designation & Ordering code

COMPLETE ELECTRICAL AND VISUAL OIL LEVEL INDICATORS

Configuration example : LVK | 20 | A | M12 | 1 | T | 5 | P01

Series
LVK

Length
10 | **20** | **30**

Seals
A NBR

Connections
M10 Screws M10 **M12** Screws M12

Electrical switch in absence of fluid
1 N.O. (Normally Open)
2 N.C. (Normally Closed)
3 SPDT (single-pole, double throw)

Version		Connection M10	Connection M12
S	Standard	•	•
T	With thermostat	-	•
P	With PT100 sensor	-	•

Thermostat setting		Version S	Version T	Version P
S	Standard (no setting)	•		•
1	50°C N.O. (Normally Open)	-	•	-
2	60°C N.O. (Normally Open)	-	•	-
3	70°C N.O. (Normally Open)	-	•	-
5	50°C N.C. (Normally Closed)	-	•	-
6	60°C N.C. (Normally Closed)	-	•	-
7	70°C N.C. (Normally Closed)	-	•	-

Execution
P01 MP Filtri standard
Pxx Customized

LVK		
Size	**H [mm]**	**I [mm]**
10	108	76
20	159	127
30	286	254

Connections	**D [mm]**	**ØR [mm]**
M10	M10	10.5
M12	M12	12.5

Without thermostat

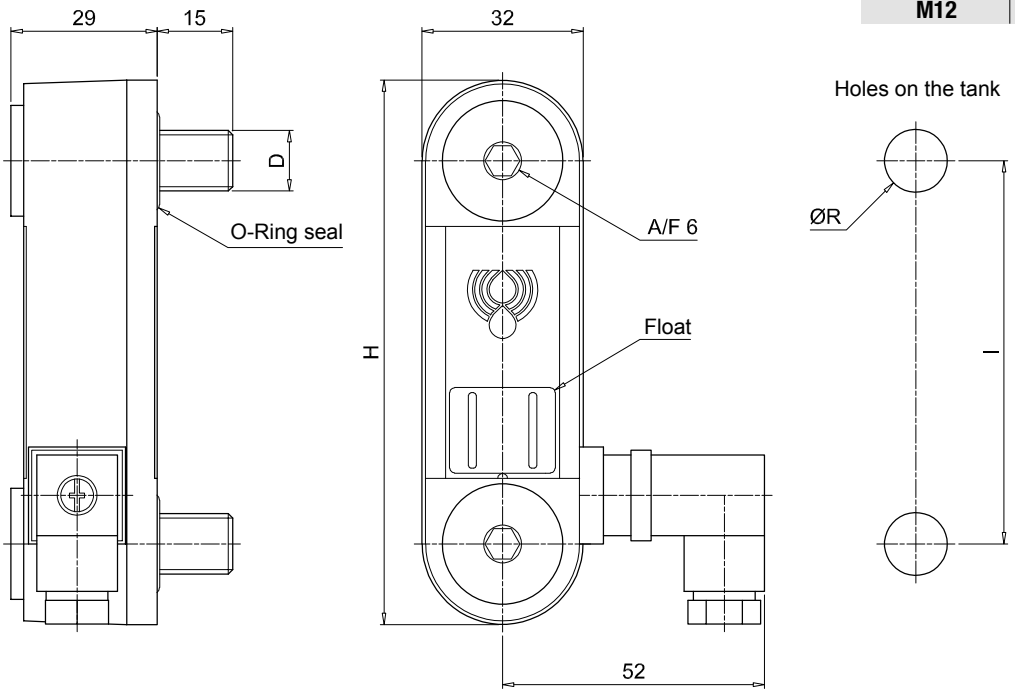

With thermostat

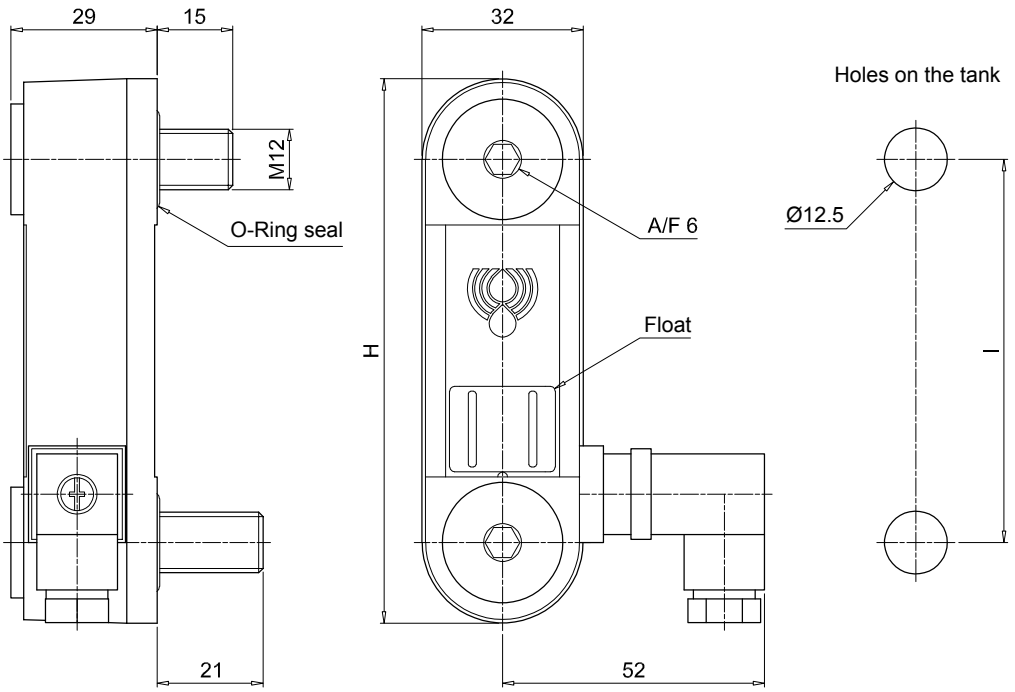

Electrical symbols

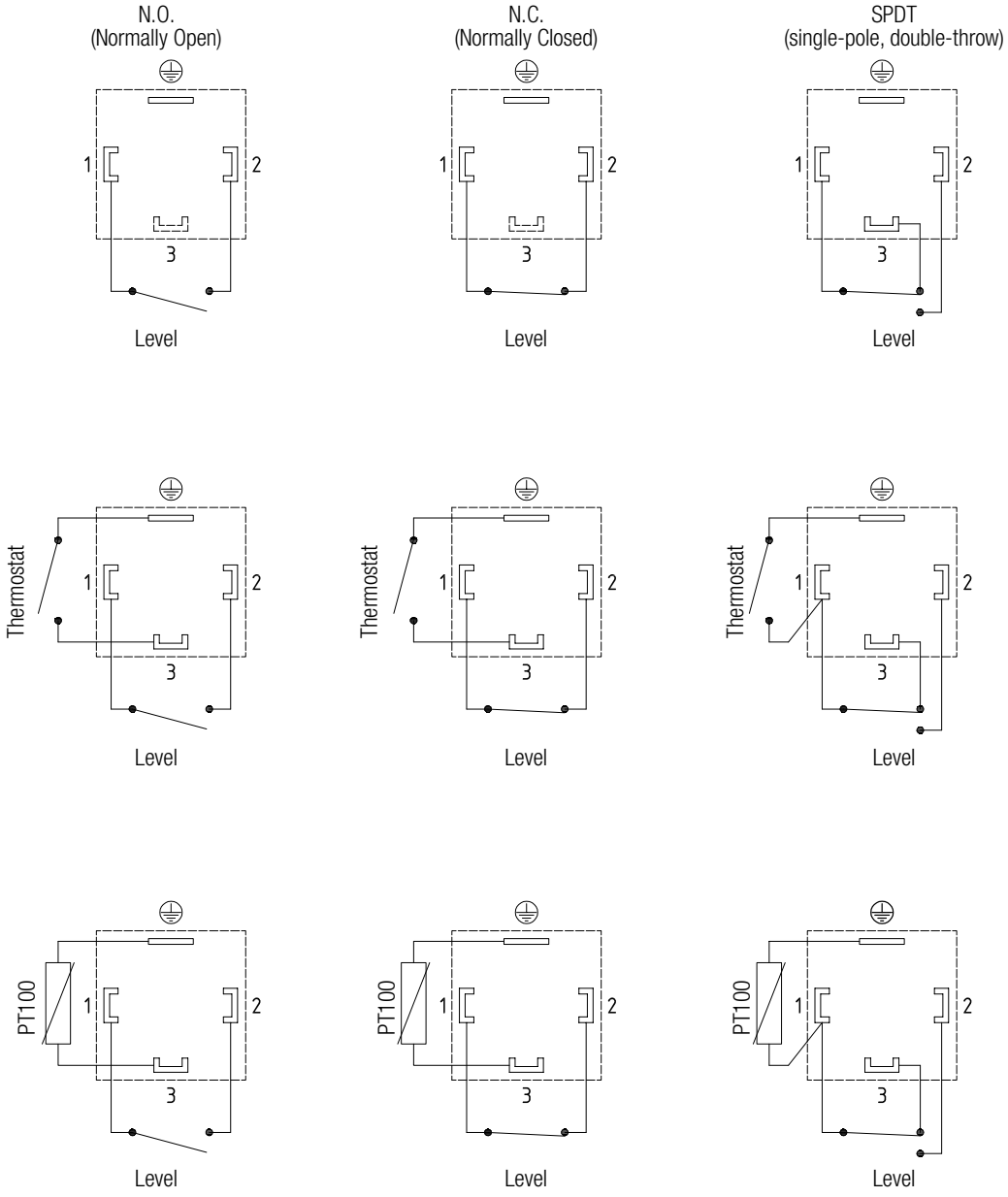

Probe thermometer

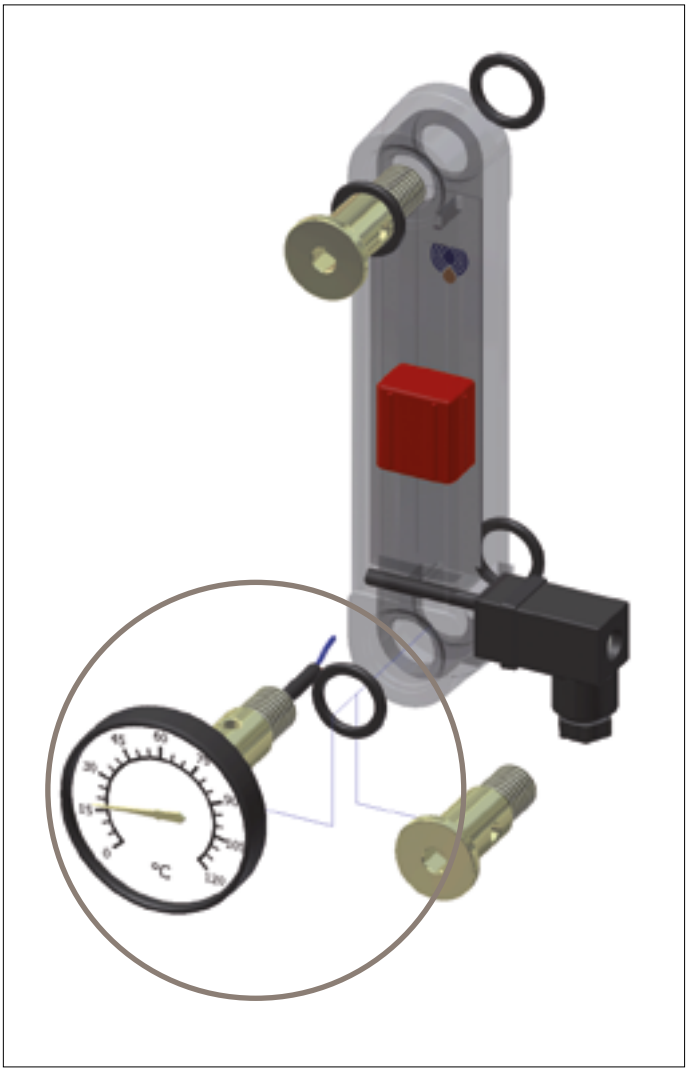

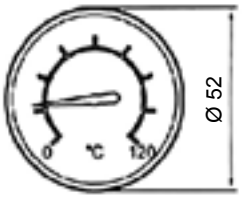

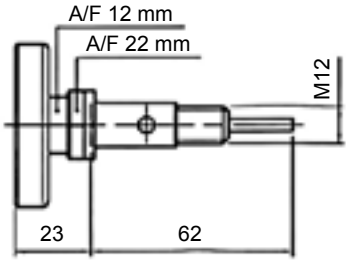

Probe thermometer	Weight [Kg]	
TV12	0.100	Probe thermometer kit M12 screw