SAP 054-075 series

Polyamide air breather filter

SA series

Metal air breather filter



SAP 054-075 GENERAL INFORMATION

Technical data

Air breathers & Filler plugs

Polyamide air breather filter
Flow rate up to 400 l/min

SAP is a range of plastic air breathers for protection of the tank against the solid contamination contained into the air.
They are directly fitted on the tank.

Available features:
- Male threaded connections up to 3/4", for a maximum flow rate of 400 l/min
- Replaceable filter element
- Fine cellulose filtration, to get a good cleanliness level into the reservoir
- Polyester media is an option for heavy environmental conditions (high humidity, sand …)

Common applications:
- Mobile machines (construction and agriculture machines)
- Industrial equipment

Flow rate Δp 0.02 bar

	Flow rate [l/min]	
Filtration rating	L03	L10
SAP054	200	250
SAP075	350	400

Materials
- Cover: Polyamide
- Connection: Polyamide
- Filter element: Resin impregnated paper

Temperature
From -25 °C to +100 °C

Weight
SAP 054 - 0.06 kg
SAP 075 - 0.15 kg



Designation & Ordering code

COMPLETE AIR FILTER

Configuration example: SAP054 | G2 | L10 | A | P01

Series and size

SAP054	
SAP075	

Connections	SAP054	SAP075
G1	G 3/8"	G 1/2"
G2	G 1/2"	G 3/4"

Filtration rating

L03	Resin impregnated paper	3 µm
L10	Resin impregnated paper	10 µm

Seals

A	NBR

Execution

P01	MP Filtri standard
Pxx	Customized

FILTER ELEMENT

Configuration example: A4 | L10 | P01

Filter element series and size

A4	SAP054
A7	SAP075

Filtration rating

L03	Resin impregnated paper	3 µm
L10	Resin impregnated paper	10 µm

Execution

P01	MP Filtri standard
Pxx	Customized

SAP054

Connections	A/F [mm]
G1	22
G2	27

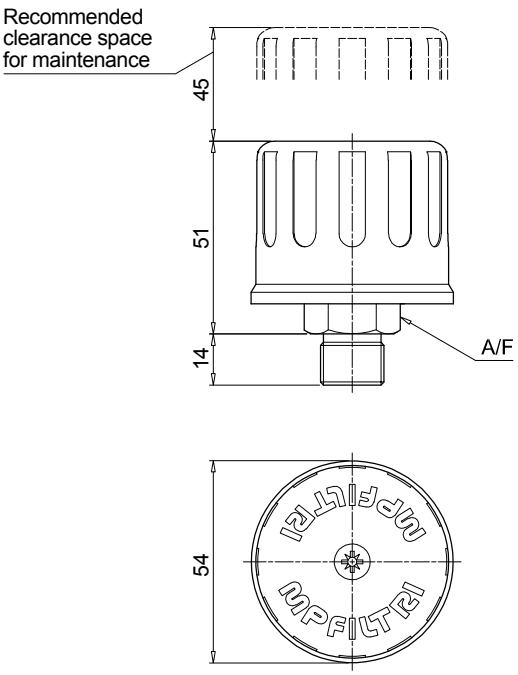

SAP075

Connections	A/F [mm]
G1	27
G2	32

