LMP 210-211

Maximum working pressure up to 6 MPa (60 bar) - Flow rate up to 365 l/min



INSTALLATION, SERVICE AND MAINTENANCE MANUAL AND SAFETY INSTRUCTIONS

Please scan or click the QR codes to get updated electronic version of the related document.

LMP210 LMP211

For all the QR codes: Scan or click me!

LMP 210-211 GENERAL INFORMATION

Description

Low & Medium Pressure filters

Maximum working pressure up to 6 MPa (60 bar)
Flow rate up to 365 l/min

LMP210 is a range of versatile low pressure filter for transmission, protection of sensitive components in low pressure hydraulic systems and filtration of the coolant into the machine tools.
They are also suitable for the off-line filtration of small reservoirs.
They are directly connected to the lines of the system through the hydraulic fittings.

Available features:

- Flanged connections up to 1 1/2", for a maximum flow rate of 365 l/min (LMP210)
- Female threaded connections up to 1 1/2", for a maximum return flow rate of 365 l/min (LMP211)
- Fine filtration rating, to get a good cleanliness level into the system
- Water removal elements, to remove the free water from the hydraulic fluid. For further information, see the Contamination Management document and the dedicate leaflet.
- Bypass valve, to relieve excessive pressure drop across the filter media
- Visual, electrical and electronic differential clogging indicators

Common applications:

Delivery lines, in any low pressure industrial equipment or mobile machines

Technical data

Filter housing materials

- Head: Aluminium
- Bowl: Cataphoretic painted steel
- Bypass valve: AISI 304 - Polyamide

Pressure

- Test pressure: 9 MPa (90 bar)
- Min. Burst pressure: 18 MPa (180 bar)
- Pulse pressure fatigue test: 1 000 000 cycles with pressure from 0 to 6 MPa (60 bar)

Bypass valve

- Opening pressure 0.35 MPa (3.5 bar) ±10%
- Other opening pressures on request.

Filter element features

Filter		Filter element	
LMP 210 - 211		CU	
Δp Element type			
Element media	**Construction**	**Δp Series**	**Δp**
A - Microfiber	Standard	N	20 bar
M - Wire mesh	Standard	N	20 bar
P - Paper	Standard	N	20 bar
Please see ordering code tables to check element Δp series availability based on filter features.			
Flow direction through the filter element: From OUT to IN			

Seals

- Standard NBR series A
- Optional FPM series V

Connections

Inlet/Outlet In-Line

Temperature

From -25 °C to +110 °C

Note

LMP 210 - 211 filters are provided for vertical mounting

Weights [kg] and volumes [dm³]

Filter series	Weights [kg]				Volumes [dm³]			
	Length	1	2	3	Length	1	2	3
LMP 210-211		3.10	4.80	6.40		1.60	2.10	2.80

Flow rates [l/min]

		Filter element design - N Series									
Filter series	Length	A03	A06	A10	A16	A25	M25	M60	M90	P10	P25
LMP 210	1	106	130	190	200	221	286	287	287	261	265
	2	153	175	220	237	249	288	289	290	265	269
	3	204	214	248	260	265	289	290	291	277	281
LMP 211	1	118	149	227	240	269	358	359	360	324	330
	2	178	207	268	292	307	361	362	363	329	335
	3	247	260	306	323	329	362	363	364	345	351

Maximum flow rate for a complete low and medium pressure filter with a pressure drop Δp = 0.7 bar.
The reference fluid has a kinematic viscosity of 30 mm^2/s (cSt) and a density of 0.86 kg/dm^3.
For different pressure drop or fluid viscosity we recommend to use our selection software available on www.mpfiltri.com.
You can also calculate the right size using the formulas present on the FILTER SIZING paragraph at the beginning of the full catalogue or at the beginning of the filter family brochure.
Please, contact our Sales Department for further additional information.

Hydraulic diagram

Filter series	Execution S	Execution B
LMP 210-211	•	•

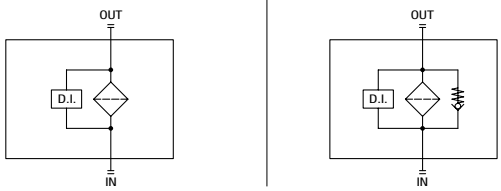

Pressure drop

Filter housings
Δp pressure drop

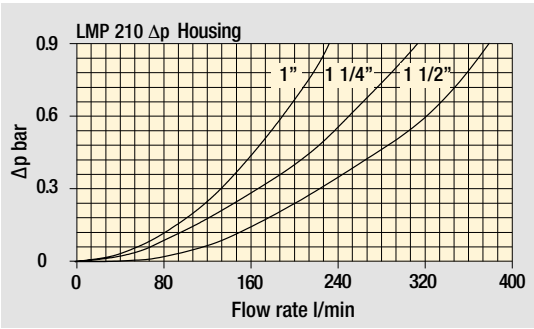

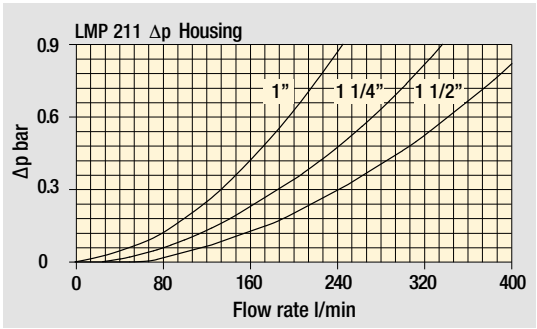

Bypass valve
pressure drop

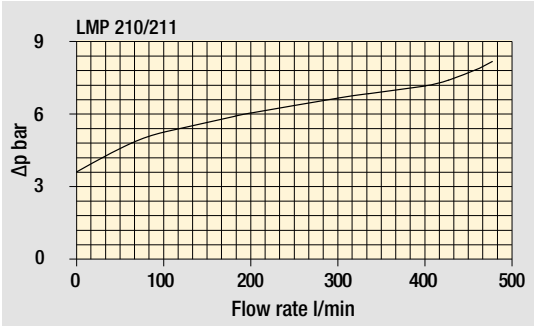

The curves are plotted using mineral oil with density of 0.86 kg/dm^3 in compliance with ISO 3968. Δp varies proportionally with density.

LMP 210

Designation & Ordering code

COMPLETE FILTER

Configuration example: LMP210 | 3 | B | A | F1 | A10 | N | P01

Series and size

LMP210

Length

1 | **2** | **3**

Bypass valve

S Without bypass

B With bypass 3.5 bar

Seals and treatments

A NBR

V FPM

E EPDM

Connections

F1 1" SAE 3000 psi/M

F2 1 1/4" SAE 3000 psi/M

F3 1 1/2" SAE 3000 psi/M

F4 1" SAE 3000 psi/UNC

F5 1 1/4" SAE 3000 psi/UNC

F6 1 1/2" SAE 3000 psi/UNC

Filtration rating (filter media)

A03	Inorganic microfiber	3 µm	**M25**	Wire mesh	25 µm
A06	Inorganic microfiber	6 µm	**M60**	Wire mesh	60 µm
A10	Inorganic microfiber	10 µm	**M90**	Wire mesh	90 µm
A16	Inorganic microfiber	16 µm	**P10**	Resin impregnated paper	10 µm
A25	Inorganic microfiber	25 µm	**P25**	Resin impregnated paper	25 µm

WA025 Water absorber inorganic microfiber 25 µm

Element Δp

N 20 bar

Execution

P01 MP Filtri standard

Pxx Customized

FILTER ELEMENT

Configuration example: CU210 | 3 | A10 | A | N | P01

Element series and size

CU210

Element length

1 | **2** | **3**

Filtration rating (filter media)

A03	Inorganic microfiber	3 µm	**M25**	Wire mesh	25 µm
A06	Inorganic microfiber	6 µm	**M60**	Wire mesh	60 µm
A10	Inorganic microfiber	10 µm	**M90**	Wire mesh	90 µm
A16	Inorganic microfiber	16 µm	**P10**	Resin impregnated paper	10 µm
A25	Inorganic microfiber	25 µm	**P25**	Resin impregnated paper	25 µm

WA025 Water absorber inorganic microfiber 25 µm

Seals and treatments

A NBR

V FPM

E EPDM

Element Δp

N 20 bar

Execution

P01 MP Filtri standard

Pxx Customized

CLOGGING INDICATORS

See page 784

DEA Electrical differential pressure indicator

DEM Electrical differential pressure indicator

DEU Electrical differential pressure indicator

DLA Electrical / visual differential pressure indicator

DLE Electrical / visual differential pressure indicator

DTA Electronic differential pressure indicator

DTI I-O Link electronic differential pressure indicator

DVA Visual differential pressure indicator

DVM Visual differential pressure indicator

PLUGS

See page 807

T2 Plug

LMP210	
Filter length	**H [mm]**
1	362
2	492
3	633

Connections	**R**
F1 - F2 - F3	M8
F4 - F5 - F6	5/16" UNC

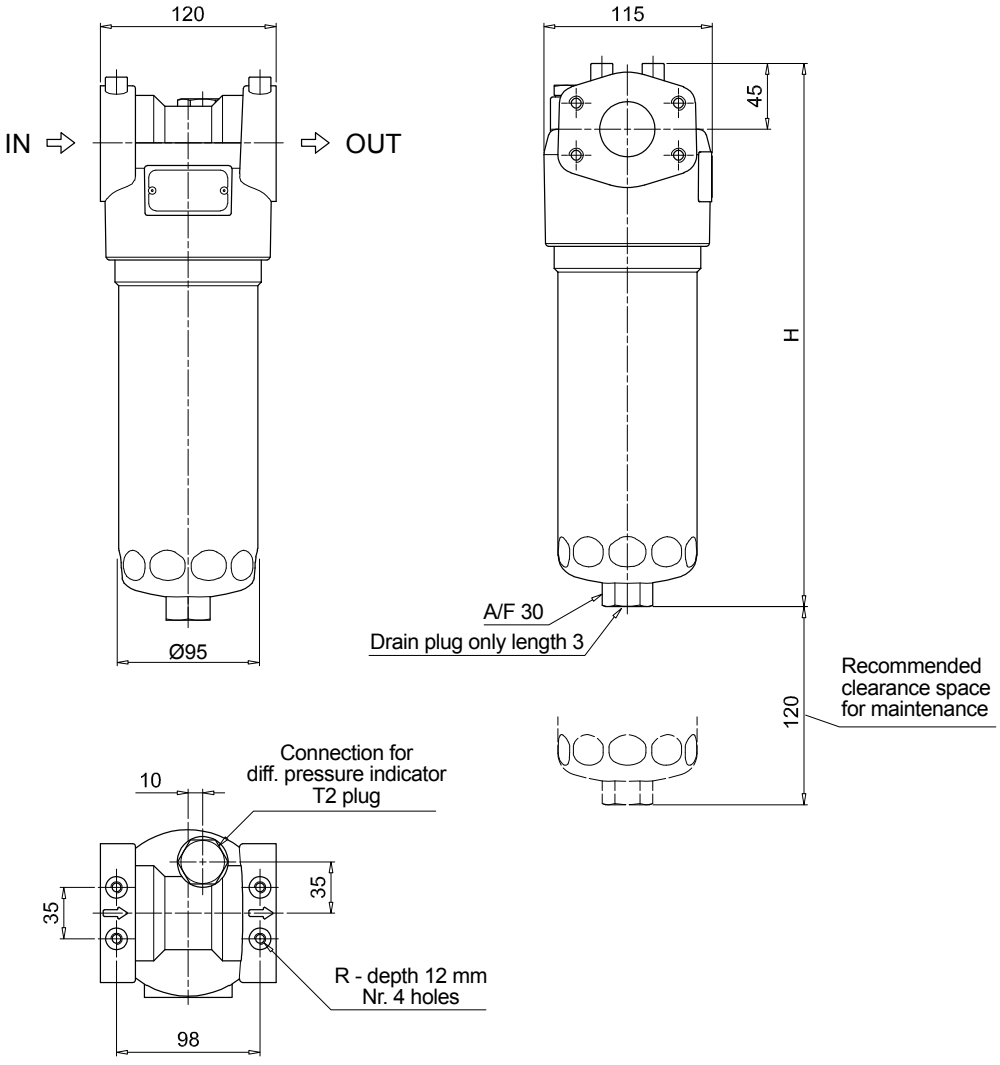

LMP 210-211 SPARE PARTS

Order number for spare parts

LMP 210

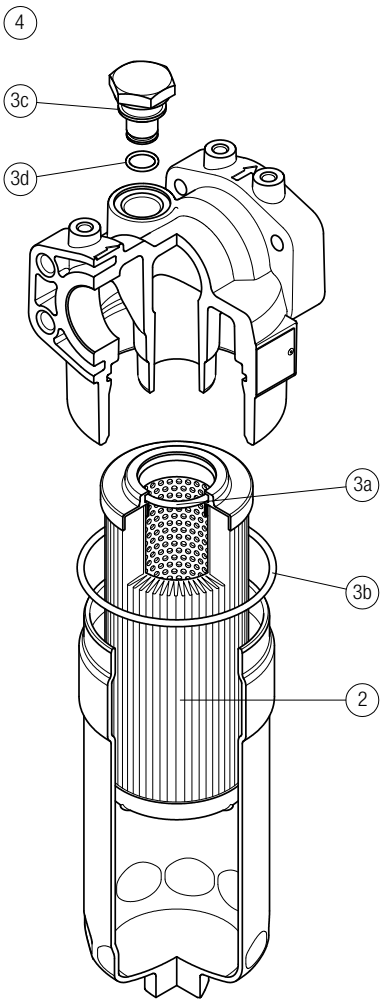

LMP 211

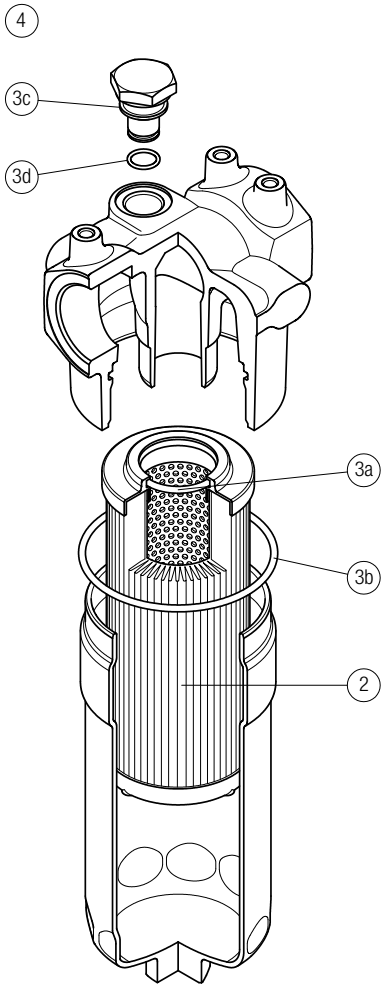

Item:	Q.ty: 1 pc. 2	Q.ty: 1 pc. 3 (3a ÷ 3d)		Q.ty: 1 pc. 4	
Filter series	Filter element	Seal Kit code number NBR	FPM	Indicator connection plug NBR	FPM
LMP 210-211	See order table	02050435	02050436	T2H	T2V