LMP 950-951 series

Maximum working pressure up to 3 MPa (30 bar) - Flow rate up to 2400 l/min



LMP 950-951 GENERAL INFORMATION

Description

Low & Medium Pressure filters

Maximum working pressure up to 3 MPa (30 bar)
Flow rate up to 2400 l/min

LMP950 is a range of low pressure filter with large filtration surface mainly suitable for lubrication, off-line filtration of the reservoirs and filtration equipment.
They are directly connected to the lines of the system through the hydraulic fittings.

Available features:

- Flanged connections up to 4", for a maximum flow rate of 2400 l/min
- In line or 90° connections, to meet any type of application
- Base-mounting design, for ease of the replacement of the filter element
- Fine filtration rating, to get a good cleanliness level into the system
- Water removal elements, to remove the free water from the hydraulic fluid. For further information, see the Contamination Management document and the dedicate leaflet.
- Bypass valve, to relieve excessive pressure drop across the filter media
- Vent ports, to avoid air trapped into the filter going into the system
- Drain ports, to remove the fluid from the housing prior the maintenance work
- Visual, electrical and electronic differential clogging indicators

Common applications:

- Off-line filtration of reservoirs
- Filtration systems
- Lubrication systems

Technical data

Filter housing materials

- Head: Anodized Aluminium
- Housing: Anodized Aluminium
- Bypass valve: Anodized Aluminium

Pressure

- Test pressure: 4.5 MPa (45 bar)
- Min. Burst pressure: 9 MPa (90 bar)
- Pulse pressure fatigue test: 1 000 000 cycles with pressure from 0 to 3 MPa (30 bar)

Bypass valve

- Opening pressure 0.35 MPa (3.5 bar) ±10%
- Other opening pressures on request.

Filter element features

Filter		Filter element	
LMP 950 - 951		CU	
Δp Element type			
Element media	**Construction**	**Δp Series**	**Δp**
A - Microfiber	Standard	N	20 bar
M - Wire mesh	Standard	N	20 bar
P - Paper	Standard	N	20 bar
Please see ordering code tables to check element Δp series availability based on filter features.			
Flow direction through the filter element: From OUT to IN			

Seals

- Standard NBR series A
- Optional FPM series V

Connections

LMP 950: In-line Inlet/Outlet
LMP 951: 90° Inlet/Outlet

Temperature

From -25 °C to +110 °C

Note

LMP 950 - 951 filters are provided for vertical mounting

Weights [kg] and volumes [dm³]

Filter series	Weights [kg]			Volumes [dm³]		
	Length	2	3	Length	2	3
LMP 950-951		25.1	33.5		15	28

Flow rates [l/min]

Filter series	Length	Filter element design - N Series					
		A03	A06	A10	A16	A25	M25 M60 M90
LMP 950	**2**	613	756	953	1219	1515	2170
	3	1148	1219	1502	1713	1808	2293
LMP 951	**2**	635	789	1007	1308	1649	2420
	3	1226	1308	1634	1881	1993	2566

Maximum flow rate for a complete low and medium pressure filter with a pressure drop Δp = 0.7 bar.
The reference fluid has a kinematic viscosity of 30 mm^2/s (cSt) and a density of 0.86 kg/dm^3.
For different pressure drop or fluid viscosity we recommend to use our selection software available on www.mpfiltri.com.
You can also calculate the right size using the formulas present on the FILTER SIZING paragraph at the beginning of the full catalogue or at the beginning of the filter family brochure.
Please, contact our Sales Department for further additional information.

Execution P02

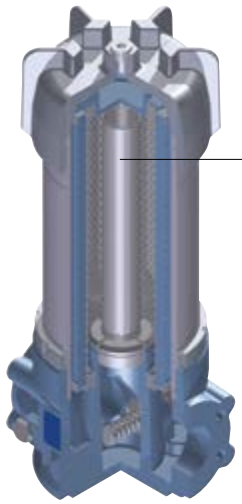

"Internal tube for low flow rate" is recommended for flow rate values below 100/150 l/min.

The use of option P02 makes it easier to fill the housing with the operating fluid.

Hydraulic diagram

Filter series	Execution S	Execution B
LMP 950-951	•	•

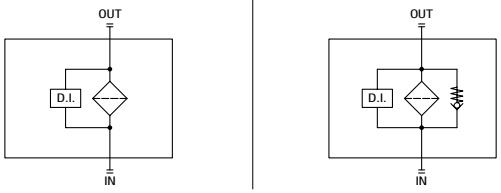

Pressure drop

Filter housings Δp pressure drop

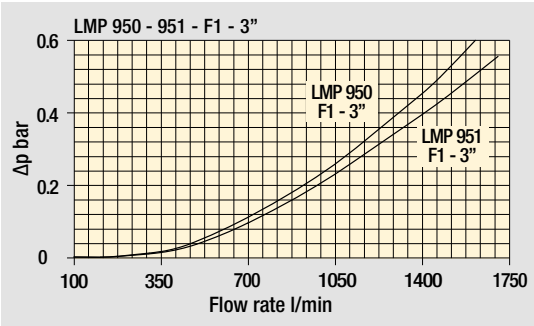

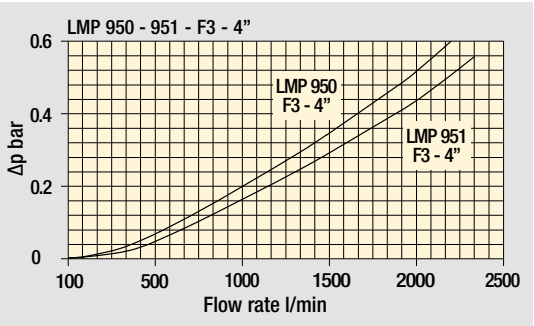

Bypass valve pressure drop

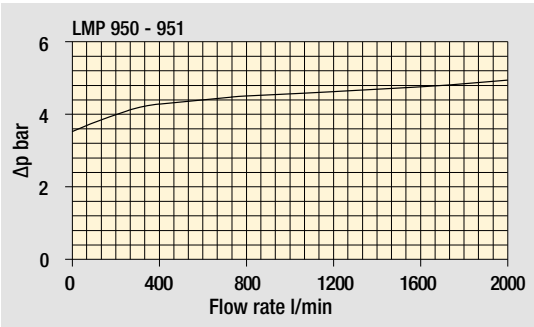

The curves are plotted using mineral oil with density of 0.86 kg/dm^3 in compliance with ISO 3968. Δp varies proportionally with density.

LMP 950-951

Designation & Ordering code

COMPLETE FILTER

Configuration example: LMP951 | 2 | B | A | F2 | A10 | N | P01

Series and size

LMP950 | **LMP951**

Length

2 | **3**

Bypass valve

S Without bypass

B With bypass 3.5 bar

Seals and treatments

A NBR

V FPM

Connections

F1 3" SAE 3000 psi/M

F2 3" SAE 3000 psi/UNC

F3 4" SAE 3000 psi/M

F4 4" SAE 3000 psi/UNC

Filtration rating (filter media)

A03	Inorganic microfiber	3 µm	**M25**	Wire mesh	25 µm
A06	Inorganic microfiber	6 µm	**M60**	Wire mesh	60 µm
A10	Inorganic microfiber	10 µm	**M90**	Wire mesh	90 µm
A16	Inorganic microfiber	16 µm			
A25	Inorganic microfiber	25 µm			

WA025 Water absorber inorganic microfiber 25 µm

Element Δp

N 20 bar

Execution

P01 MP Filtri standard

P02 With internal tube for low flow rate

Pxx Customized

FILTER ELEMENT

Configuration example: CU950 | 2 | A10 | A | N | P01

Element series and size

CU950

Element length

2 | **3**

Filtration rating (filter media)

A03	Inorganic microfiber	3 µm	**M25**	Wire mesh	25 µm
A06	Inorganic microfiber	6 µm	**M60**	Wire mesh	60 µm
A10	Inorganic microfiber	10 µm	**M90**	Wire mesh	90 µm
A16	Inorganic microfiber	16 µm			
A25	Inorganic microfiber	25 µm			

WA025 Water absorber inorganic microfiber 25 µm

Seals

A NBR

V FPM

Element Δp

N 20 bar

Execution

P01 MP Filtri standard

Pxx Customized

CLOGGING INDICATORS

See page 784

DEA Electrical differential pressure indicator

DEM Electrical differential pressure indicator

DEU Electrical differential pressure indicator

DLA Electrical / visual differential pressure indicator

DLE Electrical / visual differential pressure indicator

DTA Electronic differential pressure indicator

DTI I-O Link electronic differential pressure indicator

DVA Visual differential pressure indicator

DVM Visual differential pressure indicator

PLUGS

See page 807

T2 Plug

ACCESSORIES

See page 486

CFA Retaining clamp

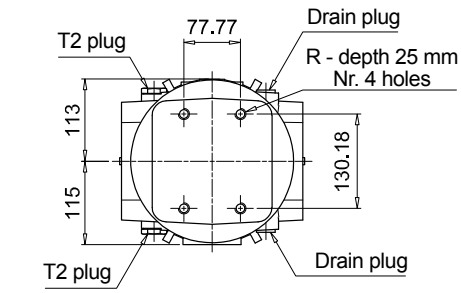

T2 plug = connection for differential pressure indicator

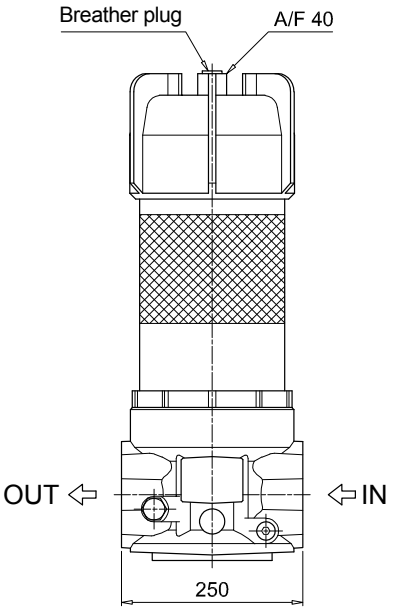

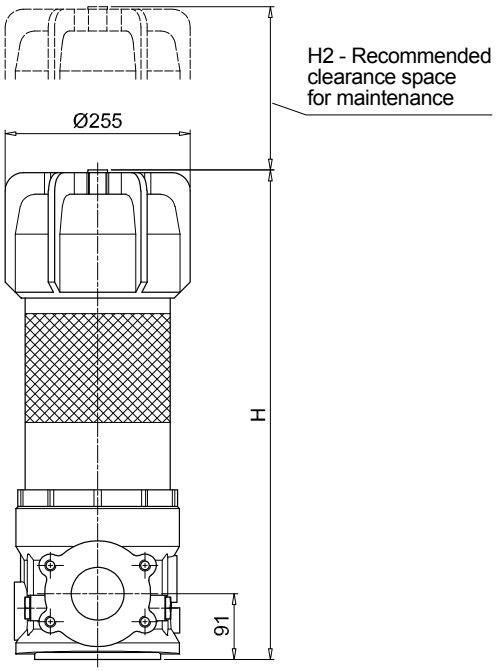

LMP950

Filter length	H [mm]	H2 [mm]
2	680	350
3	1230	900

Connections	R
F1 - F3	M16
F2 - F4	5/8" UNC

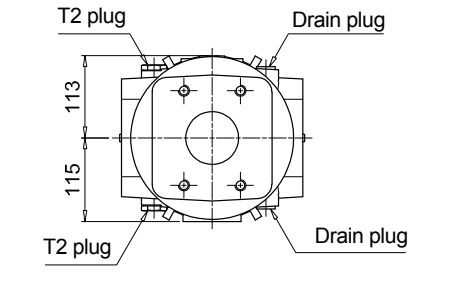

T2 plug = connection for differential pressure indicator

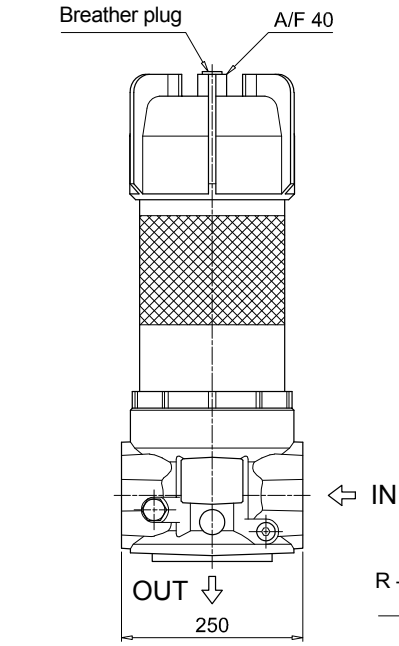

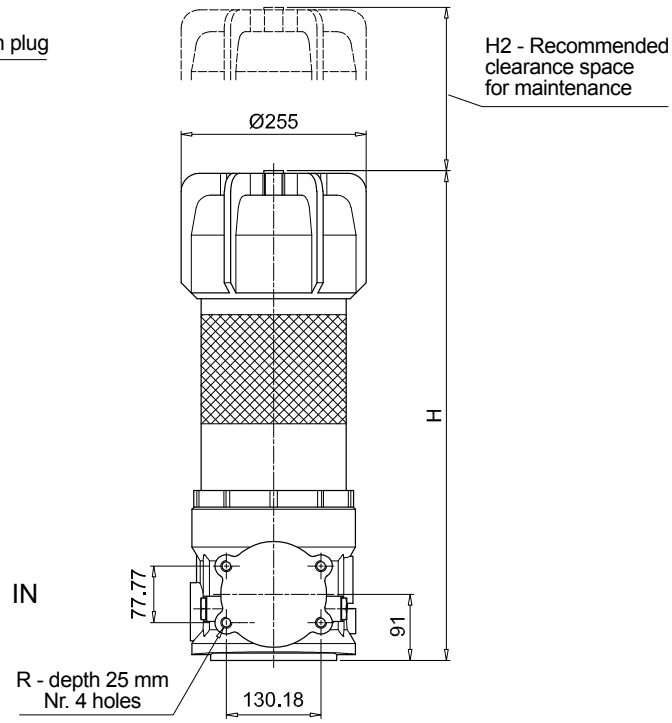

LMP951

Filter length	H [mm]	H2 [mm]
2	680	350
3	1230	900

Connections	R
F1 - F3	M16
F2 - F4	5/8" UNC

LMP 950-951 SPARE PARTS

Order number for spare parts

LMP 950 - 951

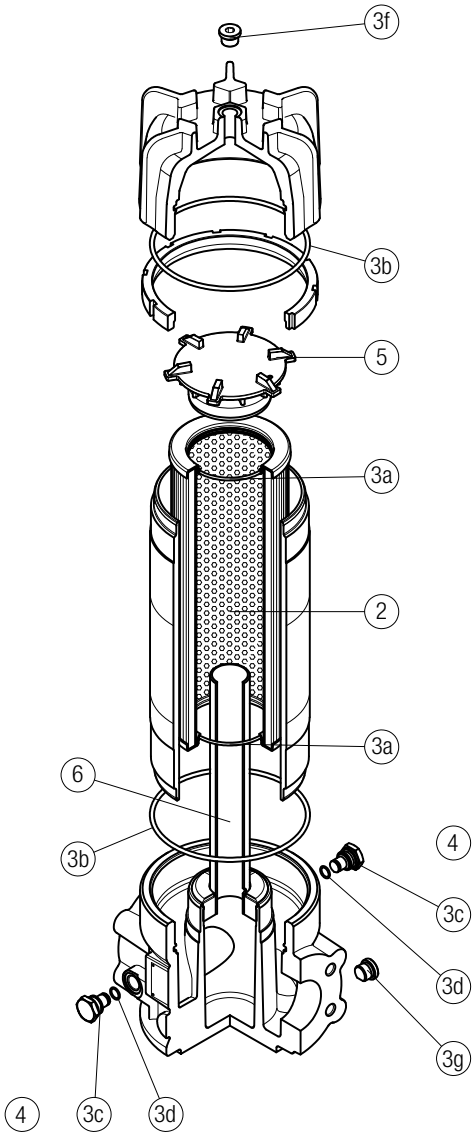

	Q.ty: 1 pc.	Q.ty: 1 pc.		Q.ty: 2 pcs.		Q.ty: 1 pc.		Q.ty: 1 pc.	
Item:	**2**	**3** (3a ÷ 3g)		**4**		**5**		**6**	
Filter series	**Filter element**	**Seal Kit code number NBR**	**FPM**	**Indicator connection plug NBR**	**FPM**	**Housing spigot no bypass**	**with bypass**	**Internal tube for low flow rate, exec. P02 length 2**	**length 3**
LMP 950-951 length 2-3	See order table	02050367	02050368	T2H	T2V	01044106	02001379	02025032	02025033