FMMX series

Maximum working pressure up to 42 MPa (420 bar) - Flow rate up to 300 l/min



INSTALLATION, SERVICE AND MAINTENANCE MANUAL AND SAFETY INSTRUCTIONS

Please scan or click the QR codes to get updated electronic version of the related document.

FMMX050 FMMX150

For all the QR codes: Scan or click me!

FMMX GENERAL INFORMATION

Description

High Pressure filters

In-line
Maximum working pressure up to 42 MPa (420 bar)
Flow rate up to 300 l/min

FMMX is a range of versatile high pressure filter for protection of sensitive components in high pressure hydraulic systems in the mobile machines.
They are directly connected to the lines of the system through the hydraulic fittings.

Available features:

- Female threaded connections up to 1 1/4", for a maximum flow rate of 300 l/min
- Fine filtration rating, to get a good cleanliness level into the system
- Bypass valve, to relieve excessive pressure drop across the filter media
- Low collapse filter element "N", for use with filters provided with bypass valve
- Visual, electrical and electronic differential clogging indicators
- MYclean interface connection for the filter element, to protect the product against non-original spare parts.
- External protective wrap, to optimize the flow through the element and to save the element efficiency against non-proper handling

Common applications:

- Agricultural machines
- Mobile machines

Technical data

Filter housing materials

- Head: Painted cast iron, black RAL 9005
- Housing: Phosphatized steel
- Bypass valve: Steel

Pressure

- Test pressure: 63 MPa (630 bar)
- Min. Burst pressure: 126 MPa (1260 bar)
- Pulse pressure fatigue test: 1 000 000 cycles with pressure from 0 to 42 MPa (420 bar)

Bypass valve

- Opening pressure 0.6 MPa (6 bar) ±10%
- Other opening pressures on request.

Filter element features

Filter		Filter element	
FMMX		HPX	
Δp Element type			
Element media	**Construction**	**Δp Series**	**Δp**
A - Microfiber	Standard	N	20 bar
A - Microfiber	High Δp with external support	S	210 bar
M - Wire mesh	Standard	N	20 bar
Please see ordering code tables to check element Δp series availability based on filter features.			
Flow direction through the filter element: From OUT to IN			

Seals

- Standard NBR series A
- Optional FPM series V

Temperature

From -25 °C to +110 °C

Connections

In-line Inlet/Outlet

Note

FMMX filters are provided for vertical mounting

Weights [kg] and volumes [dm³]

Filter series	Weights [kg]						Volumes [dm³]					
	Length	1	2	3	4	5	Length	1	2	3	4	5
FMMX 050		3.11	3.48	3.90	4.36	5.54		0.34	0.48	0.63	0.81	1.23
FMMX 150		7.50	9.50	10.90	-	-		0.60	1.00	1.25	-	-

Flow rates [l/min]

		Filter element design - N Series						Filter element design - S Series				
Filter series	Length	A03	A06	A10	A16	A25	M25	A03	A06	A10	A16	A25
FMMX 050	1	42	43	79	82	106	147	29	39	57	59	74
	2	52	57	85	96	121	149	45	49	76	88	114
	3	66	69	97	106	130	150	58	61	89	99	125
	4	83	89	113	115	134	152	74	80	106	108	129
	5	107	110	130	134	141	154	93	95	111	121	139
FMMX 150	1	81	88	156	163	179	295	58	67	128	128	158
	2	142	145	227	230	236	312	119	137	212	212	207
	3	170	180	242	245	263	315	138	164	211	224	239

Maximum flow rate for a complete pressure filter with a pressure drop Δp = 1.5 bar.

The reference fluid has a kinematic viscosity of 30 mm^2/s (cSt) and a density of 0.86 kg/dm^3.

For different pressure drop or fluid viscosity we recommend to use our selection software available on www.mpfiltri.com.

You can also calculate the right size using the formulas present on the FILTER SIZING paragraph at the beginning of the full catalogue or at the beginning of the filter family brochure.

Please, contact our Sales Department for further additional information.

Hydraulic diagram

	without bypass		with bypass 6.0 bar	
Filter series	Style S - without check valve	Style T - with check valve	Style B - without check valve	Style D - with check valve
FMMX 050-150	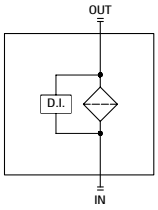	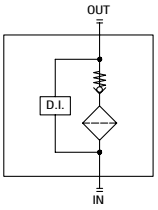	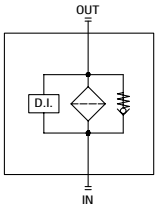	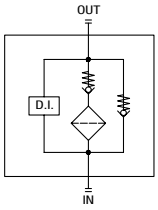

Pressure drop

Filter housings
Δp pressure drop

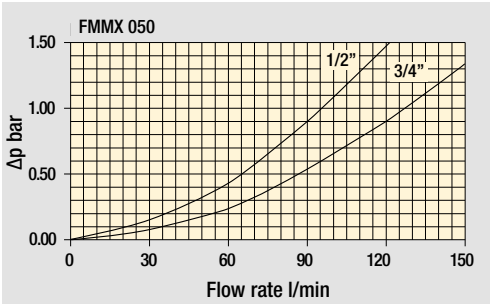

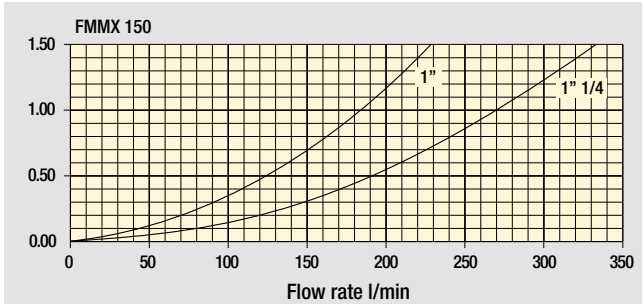

Bypass valve
pressure drop

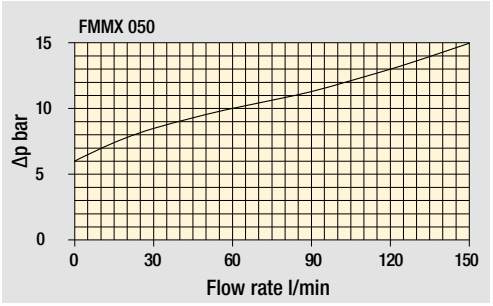

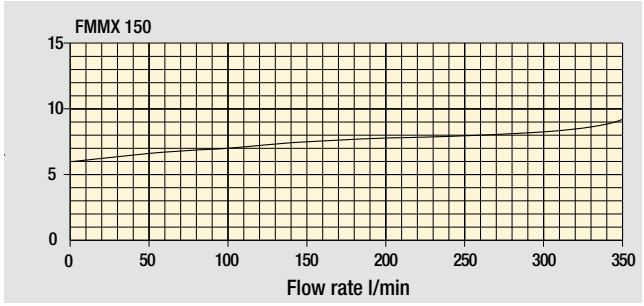

Filter housing with check valve

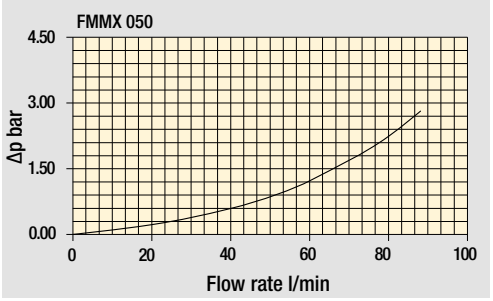

The curves are plotted using mineral oil with density of 0.86 kg/dm^3 in compliance with ISO 3968. Δp varies proportionally with density.

FMMX FMMX150

Designation & Ordering code

COMPLETE FILTER

Configuration example: FMMX150 | 2 | B | A | D | 2 | M25 | N | P01

Series and size
FMMX150 Filter featuring MYCLEAN Filter Element

Length
1 | **2** | **3**

Valves (see page 531)

S	Without bypass
B	With bypass 6 bar
T	With check valve, without bypass
D	With check valve, with bypass 6 bar

Seals

A	NBR	**V**	FPM

Connections

C	G1”	**F**	1 1/4” NPT
D	G1 1/4”	**G**	SAE 16 - 1 5/16” - 12 UN
E	1” NPT	**H**	SAE 20 - 1 5/8” - 12 UN

Connections for differential indicator

1	Without connection
2	Upper connection
3	Frontal connection

Filtration rating (filter media)

A03	Inorganic microfiber	3 µm
A06	Inorganic microfiber	6 µm
A10	Inorganic microfiber	10 µm
A16	Inorganic microfiber	16 µm
A25	Inorganic microfiber	25 µm
M25	Wire mesh	25 µm

Element Δp		Valves S	B	T	D
N	20 bar	-	•	-	•
S	210 bar	•	-	•	-

Executions

Base	zerospark	
P01	**Z01** *	MP Filtri standard
Pxx	**Zxx** *	Customized

* Not for Mxx filter media

FILTER ELEMENT

Configuration example: HPX150 | 3 | A10 | A | N | P01

Element series and size
HPX150 Filter Element with MYCLEAN feature

Element length
1 | **2** | **3**

Filtration rating (filter media)

A03	Inorganic microfiber	3 µm
A06	Inorganic microfiber	6 µm
A10	Inorganic microfiber	10 µm
A16	Inorganic microfiber	16 µm
A25	Inorganic microfiber	25 µm
M25	Wire mesh	25 µm

Seals

A	NBR
V	FPM

Element Δp

N	20 bar
S	210 bar

Executions

Base	zerospark	
P01	**Z01** *	MP Filtri standard
Pxx	**Zxx** *	Customized

* Not for Mxx filter media

CLOGGING INDICATORS

See page 786

DEA	Electrical differential pressure indicator
DEM	Electrical differential pressure indicator
DEU	Electrical differential pressure indicator
DLA	Electrical / visual differential pressure indicator
DLE	Electrical / visual differential pressure indicator
DTA	Electronic differential pressure indicator
DTI	I-O Link electronic differential pressure indicator
DVA	Visual differential pressure indicator
DVM	Visual differential pressure indicator

PLUGS

See page 807

T2	Plug

FMMX150	
Filter length	**H [mm]**
1	230
2	340
3	415

Connections	R
C-D	M10
E-F-G-H	3/8" UNC

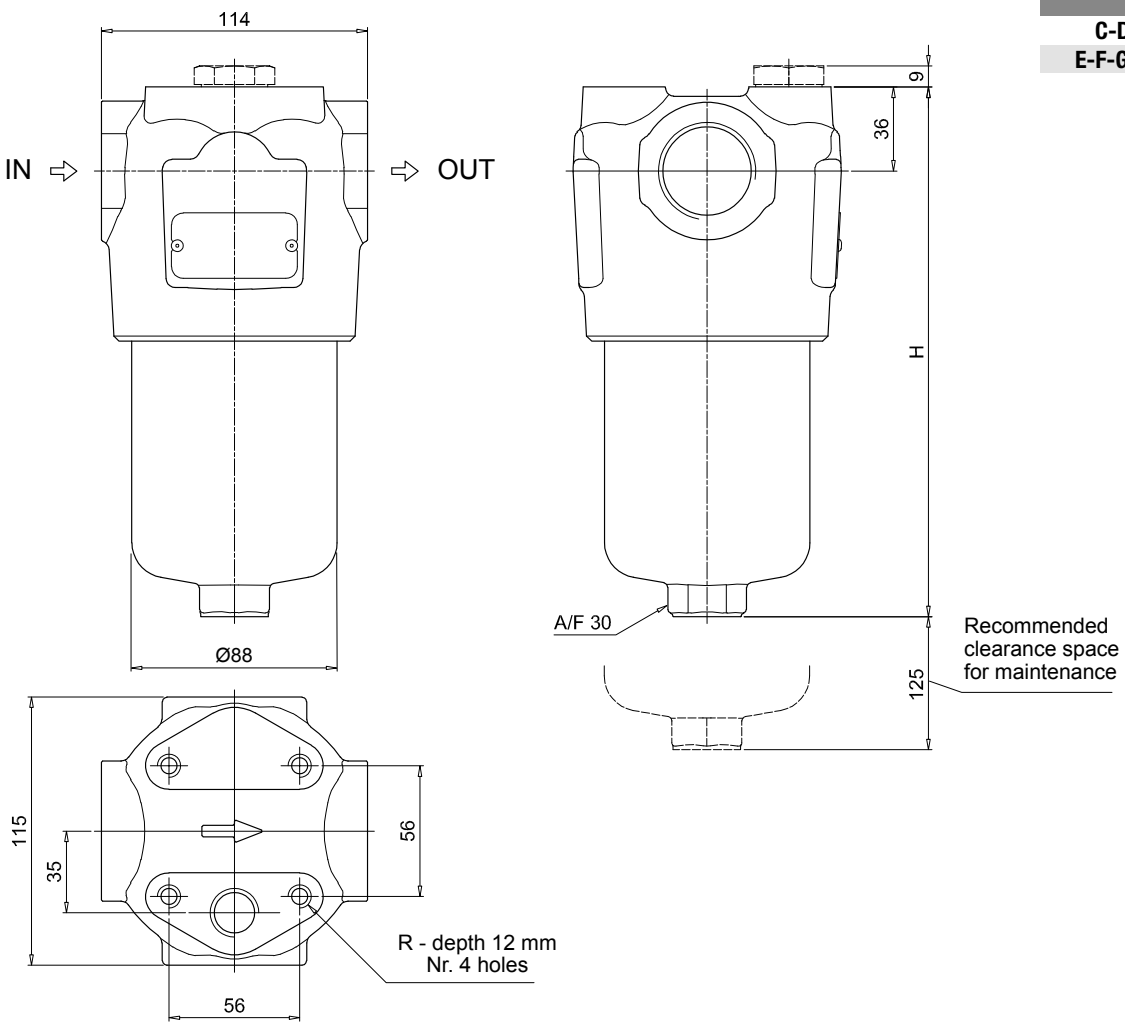

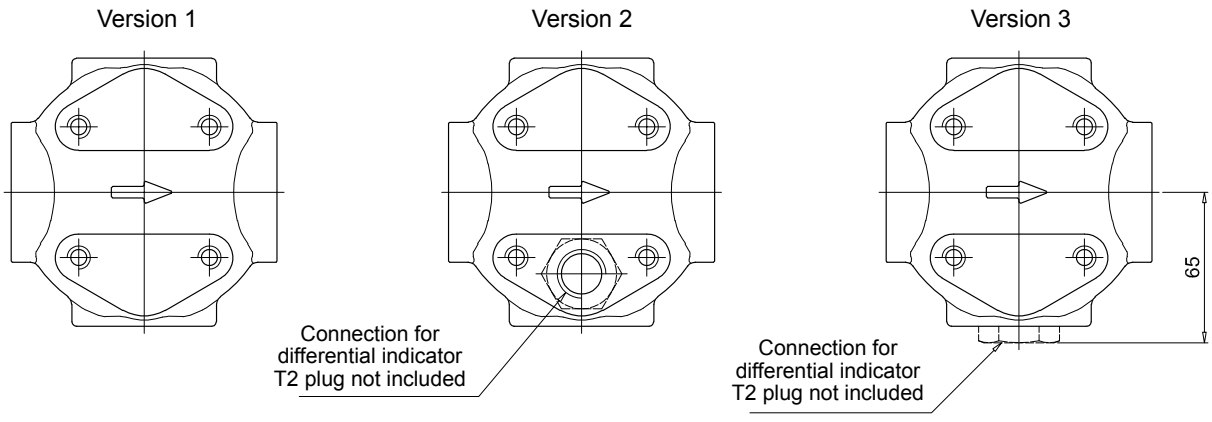

FMMX 150

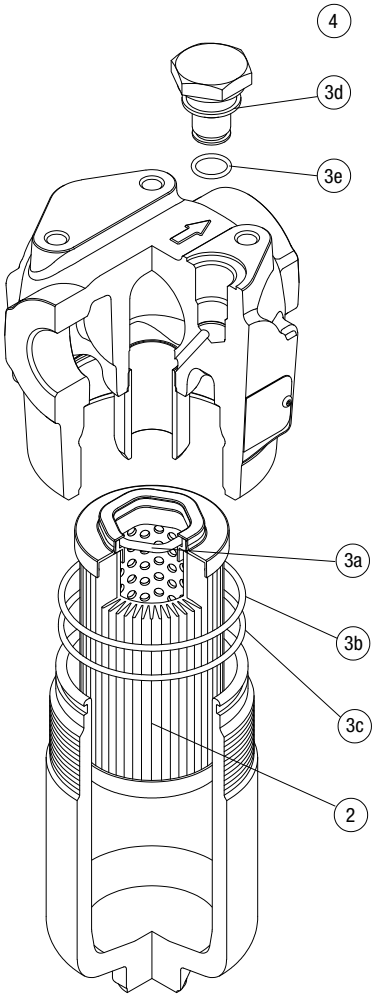

Item:	Q.ty: 1 pc. 2	Q.ty: 1 pc. 3 (3a ÷ 3e)		Q.ty: 1 pc. 4	
Filter series	Filter element	Seal Kit code number NBR	FPM	Indicator connection plug NBR	FPM
FMMX 150	See order table	02050868	02050869	T2H	T2V