LEN - LEG - LET - LEM - LEU series

Electrical oil level indicators



Technical data

Electrical Oil Level Indicators

LET is a range of electrical fluid level indicators for monitoring of the fluid level into the tank. They are directly fitted on the tank.
The float moves through the rod while the fluid level changes.
A magnet, fitted into the float, turns a reed sensor fixed into the rod.
The integrated thermostat allows to get a remote monitoring of the temperature.

Available features:
- G 1" male threaded or flanged connections
- Adjustable size on request, to meet every size of tank
- Floating monitor for oil level check

Common applications:
- Hydraulic systems
- Mobile machines
- Industrial equipment

Electrical symbol:

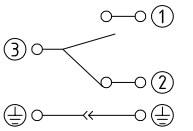

1: Thermostat
2: Float
3: Common

Note: to invert the contact status from NC to NO and vice versa, simply invert the float.

Materials
- Flange/Threaded body: Aluminium
- Tube: Brass
- Float: Polyamide foam
- O-Ring: NBR
- Circlip: Phosphor bronze
- Contact: N.C. (Normally Closed)

Electrical data
- Protection rating: IP65
- Max switching capacity: 80 W
- Max switching current: 1 A
- Max switching voltage: 250 Vac
- Fluid specific gravity: > 0.75

Temperature
From -15 °C to + 80 °C

Weight

LET A 200	0.20 kg
LET A 300	0.23 kg
LET A 400	0.28 kg



Designation & Ordering code

COMPLETE ELECTRICAL OIL LEVEL INDICATOR

Configuration example :	LET	A	300	1	A	1	A	F	S	50	P01

Series
LET

Tube material
A Brass

Length
200 | **300** | **400**

Number of floats
1 Nr. 1 float

Float material
A Polyamide foam

Electrical switch
1 N.C. (Normally Closed)

Seals
A NBR

Connections
G G 1"
F Nr. 3 holes flange

Electrical connection
S EN 175301-803 connector

Thermostat setting
50 50°C N.O. (Normally Open)

Execution
P01 MP Filtri standard
Pxx Customized

LET	
Length	**H1 [mm]**
200	200
300	300
400	400

Connection “G”

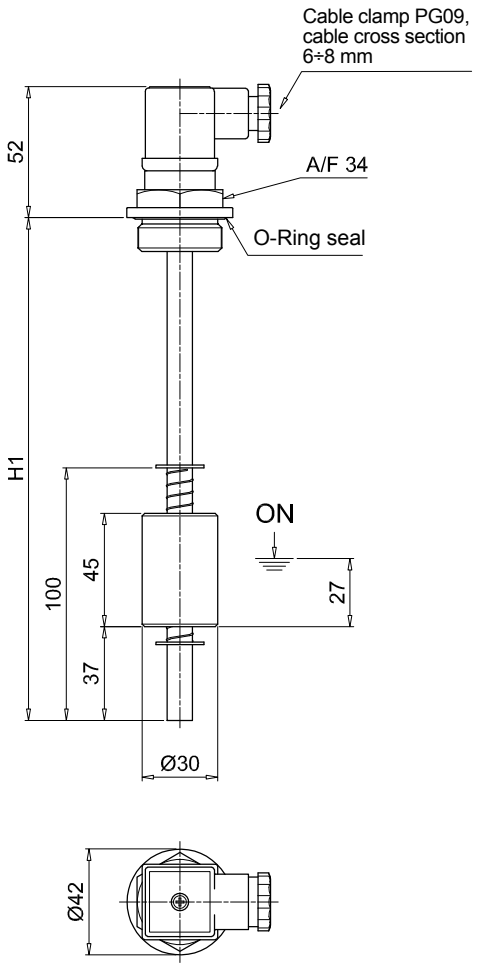

Connection “F”

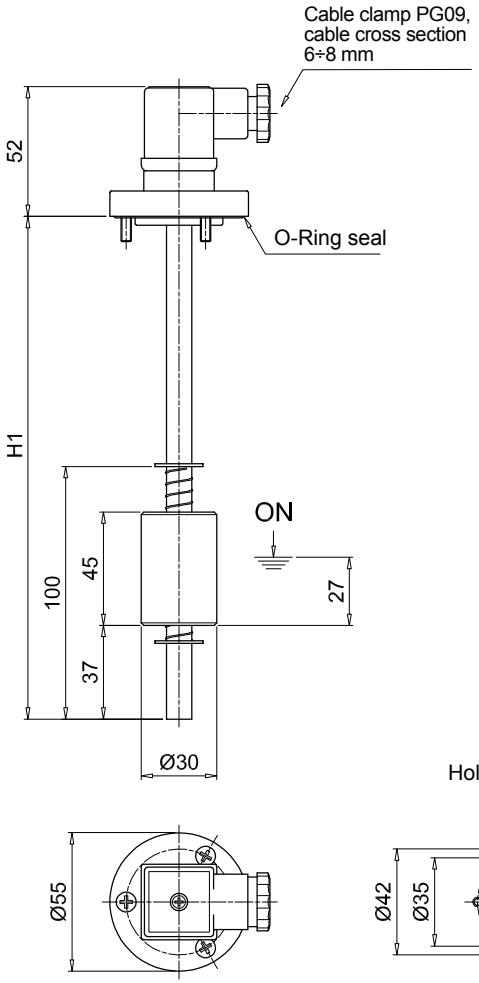

Holes on the tank

