* Abhängig vom Motorfabrikat kann dieses Maß mehr als in der Zeichnung angegeben variieren.
* *Depending on the motor brand, this dimension may vary more than stated in the drawing.*

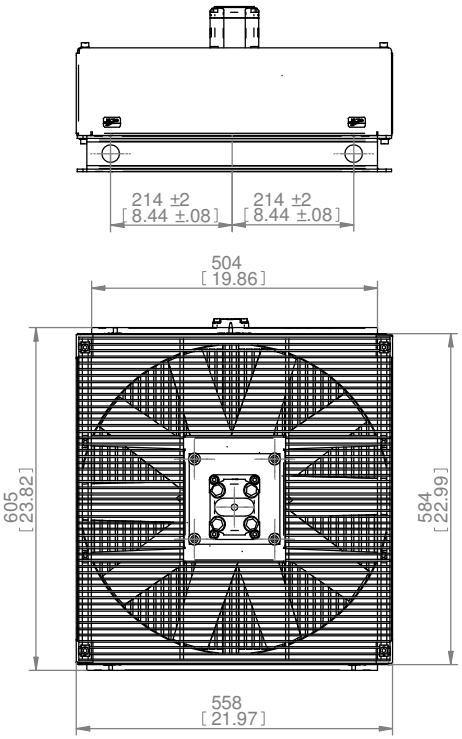

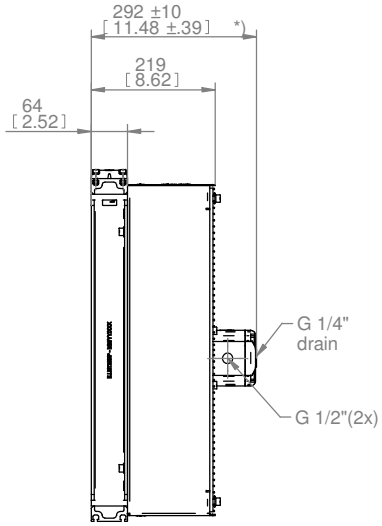

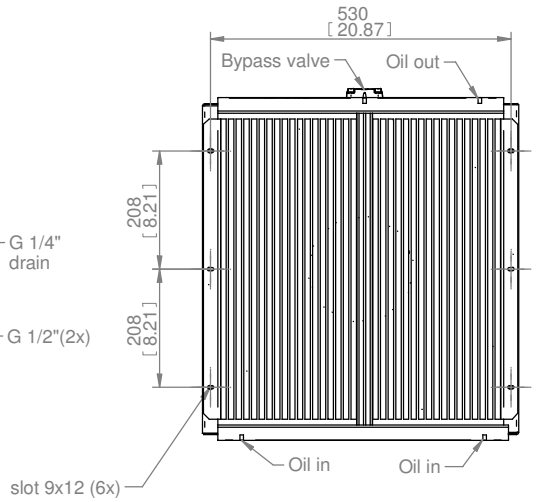

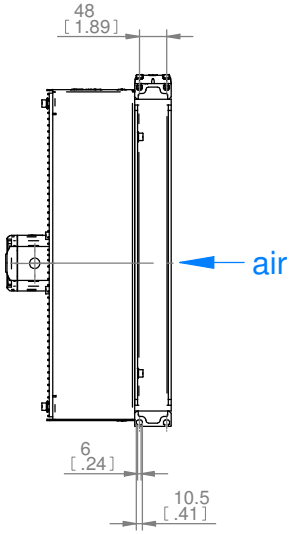

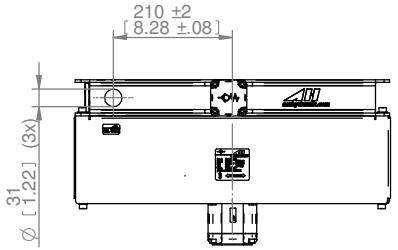

Description

The asa rail system is the first worldwide flexible mounting and connection system for air blast heat exchangers.
The flexibility comes from free choice of the direction. Each port on the radiator has 3 possibilities. This well designed radiator concept brings another flexible innovation hit to the standard cooler market: The oil flow direction can be varied between u-flow direction and diagonal oil flow on each TT rail cooler.

The rail slots in the radiator are not only to connect the blocks and make the cooler complete. Various possible mounting arrangements can be attached to the system: bypass systems, mounting of the cooler to an aggregate, measurement devices, and much more.

Please contact us to discover the huge potential of this system for your application.

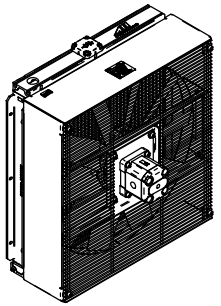

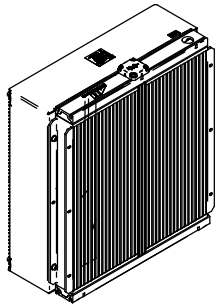

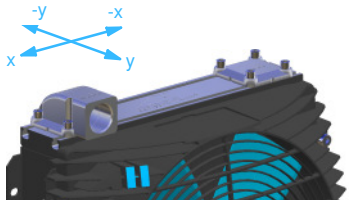

This drawing and attached written disclosure, if any, is our intellectual property and must not be used or disclosed to third parties without our explicit consent. All rights reserved. *Diese Unterlage ist unser Eigentum und darf ohne unsere Zustimmung nicht verwendet oder an Dritte weitergegeben werden. Alle Rechte vorbehalten.*
ASA Hydraulik Ges.m.b.H. A-1210 Wien

index	modification	date	name

free size tolerance: Din 2768-m
surface:
scale:
weight:

item number(s): ASATT25RH11BP

description: Oil/Air cooler ASA TT 25 rail AC

	date	name
set up	07.12.11	DV
modif.	07.12.11	DV
review.	07.12.11	ML
release	07.12.11	PP

drawing number: A-03647-00

page 1 of pgs.

asahydraulik.com

drawing file: ☐ BC ☐ MC ☐ MTC update. ERP.: