FHP series

Maximum working pressure up to 42 MPa (420 bar) - Flow rate up to 630 l/min



INSTALLATION, SERVICE AND MAINTENANCE MANUAL AND SAFETY INSTRUCTIONS

Please scan or click the QR codes to get updated electronic version of the related document:

FHP010 FHP011 FHP065 FHP135 FHP350 FHP351 FHP500

For all the QR codes: Scan or click me!

FHP GENERAL INFORMATION

Description

High Pressure filters

In-line
Maximum working pressure up to 42 MPa (420 bar)
Flow rate up to 630 l/min

FHP is a range of versatile high pressure filter for protection of sensitive components in high pressure hydraulic systems in the industrial equipment.
They are directly connected to the lines of the system through the hydraulic fittings.

Available features:

- Female threaded connections up to 1 1/2" and flanged connections up to 2", for a maximum return flow rate of 630 l/min
- Fine filtration rating, to get a good cleanliness level into the system
- Bypass valve, to relieve excessive pressure drop across the filter media
- Check valve, to protect the system against reverse flow
- Reverse flow valve, to allow bidirectional flow through the filter housing. The back flow is not filtered. The filter requires the use of internal check valves to direct the flow through the element in one direction and around the element in the other
- Low collapse filter element "N", for use with filters provided with bypass valve
- High collapse filter element "H", for use with filters not provided with bypass valve
- Low collapse filter element with external support "R", for filter element protection against the back pressure caused by the check valve or the reverse flow in filters provided with the bypass valve
- High collapse filter element with external support "S", for filter element protection against the back pressure caused by the check valve or the reverse flow in filters not provided with the bypass valve
- Visual, electrical and electronic differential clogging indicators

Common applications:

Delivery lines, in any high pressure industrial equipment or mobile machines

Technical data

Filter housing materials

- Head: Phosphatized cast iron
- Housing: Phosphatized steel
- Bypass valve
  AISI 316L: FHP 010 - 011
  Brass: FHP 065 - 135
  Brass / AISI 304: FHP 350-351
  Steel: FHP 500
- Reverse Flow
  Steel: FHP 350 - FHP 500
- Check valve: Steel

Pressure

- Test pressure: 63 MPa (630 bar)
- Burst pressure: 126 MPa (1260 bar)
- Pulse pressure fatigue test: 1 000 000 cycles with pressure from 0 to 42 MPa (420 bar)

Bypass valve

- Opening pressure 0.6 MPa (6 bar) ±10%
- Other opening pressures on request.

Filter element features

Filter		Filter element	
FHP		HP	
Δp Element type			
Element media	**Construction**	**Δp Series**	**Δp**
A - Microfiber	Standard	N	20 bar
	With external support	R	20 bar
	High Δp	H	210 bar
	High Δp with external support	S	210 bar
M - Wire mesh	Standard	N	20 bar
Please see ordering code tables to check element Δp series availability based on filter features.			
Flow direction through the filter element: From OUT to IN			

Seals

- Standard NBR series A
- Optional FPM series V

Temperature

From -25 °C to +110 °C

Connections

FHP 010 - 065 - 135 - 350 - 351 - 500:
In-line Inlet/Outlet
FHP 011:
90° Inlet/Outlet

Note

FHP filters are provided for vertical mounting

Weights [kg] and volumes [dm³]

Filter series	Weights [kg]						Volumes [dm³]					
	Length	1	2	3	4	5	Length	1	2	3	4	5
FHP 010 - 011		2.05	2.18	2.64	3.13	-		0.10	0.12	0.15	0.20	-
FHP 065		4.26	4.62	5.83	-	-		0.25	0.30	0.50	-	-
FHP 135		7.11	8.71	9.76	-	-		0.43	0.76	0.97	-	-
FHP 350 - 351		13.95	16.08	18.37	20.85	-		1.00	1.72	2.49	3.32	-
FHP 500		27.00	31.17	34.69	46.70	52.5		1.71	2.43	3.04	5.18	6.51

Flow rates [l/min]

		Filter element design - H Series					Filter element design - N Series					
Filter series	Length	A03	A06	A10	A16	A25	A03	A06	A10	A16	A25	M25
FHP 010	**1**	3	5	6	7	8	4	6	8	9	10	37
	2	5	7	13	16	22	6	8	16	19	24	40
	3	10	13	22	25	30	11	14	23	26	31	41
	4	12	15	25	27	32	16	19	27	30	33	41
FHP 011	**1**	3	5	6	7	9	4	6	8	9	11	47
	2	5	7	14	17	24	7	9	17	21	28	52
	3	11	14	25	29	36	11	14	26	30	37	53
	4	12	16	28	32	38	17	21	32	36	40	54
FHP 065	**1**	24	25	50	59	84	25	33	56	63	90	142
	2	33	38	68	77	98	34	52	72	79	106	143
	3	61	70	100	107	123	61	73	101	108	125	147
FHP 135	**1**	49	55	95	98	147	67	72	115	122	159	184
	2	89	106	129	131	163	105	111	140	142	192	209
	3	120	132	158	166	180	141	143	176	179	193	211
FHP 350 FHP 351	**1**	108	115	188	197	301	127	140	234	282	343	451
	2	196	225	317	323	396	256	278	394	415	465	480
	3	266	310	384	392	440	331	370	450	466	475	490
	4	308	333	391	398	445	369	393	456	474	495	503
FHP 500	**1**	144	157	265	268	355	269	305	390	406	444	612
	2	232	262	350	363	398	321	357	433	441	484	619
	3	293	301	398	408	455	396	416	497	499	537	622
	4	336	377	452	455	507	430	475	516	524	545	626
	5	420	428	494	500	544	475	493	535	545	569	627

Maximum flow rate for a complete pressure filter with a pressure drop Δp = 1.5 bar.

The reference fluid has a kinematic viscosity of 30 mm^2/s (cSt) and a density of 0.86 kg/dm^3.

For different pressure drop or fluid viscosity we recommend to use our selection software available on www.mpfiltri.com.

You can also calculate the right size using the formulas present on the FILTER SIZING paragraph at the beginning of the full catalogue or at the beginning of the filter family brochure.

Please, contact our Sales Department for further additional information.

Hydraulic diagram

Filter series	Style S	Style B	Style T	Style D	Style V	Style Z
FHP 010 - 011	•	•	-	-	•	•
FHP 065	•	•	•	-	-	-
FHP 135	•	•	•	-	-	-
FHP 350-351	•	•	•	•	•	•
FHP 500	•	•	•	•	•	•

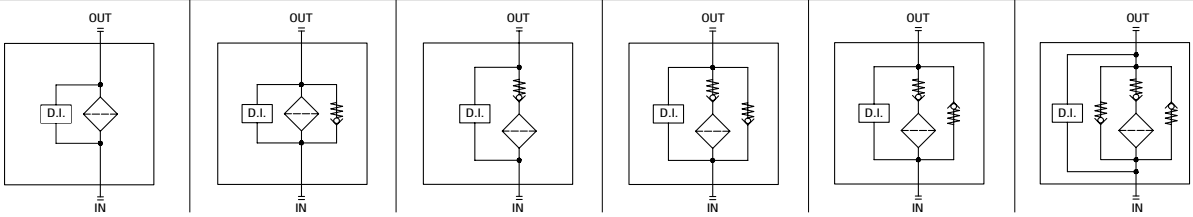

Pressure drop

Filter housings Δp pressure drop

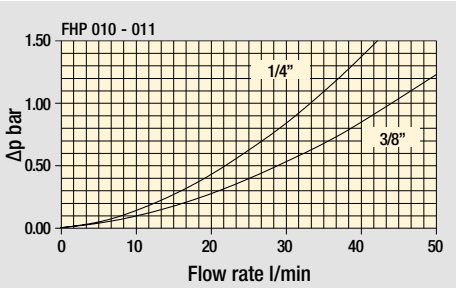

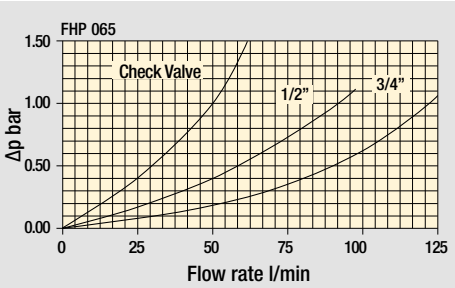

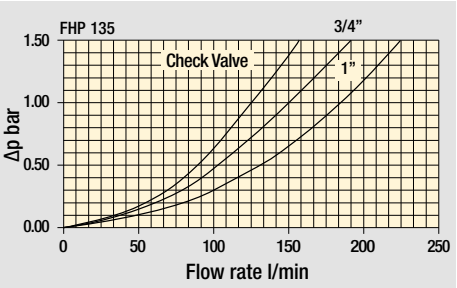

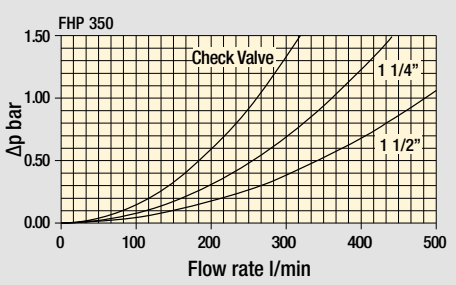

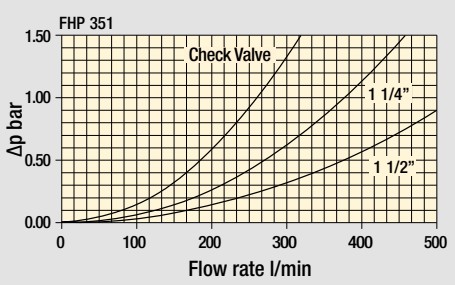

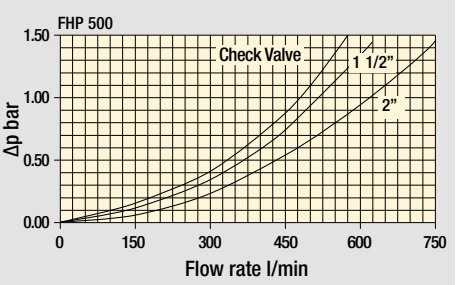

Bypass valve pressure drop

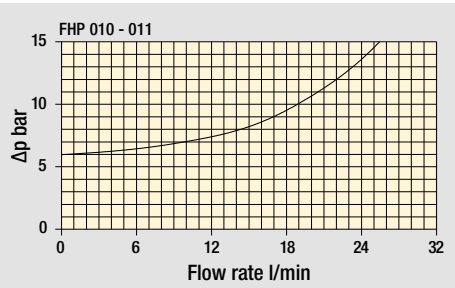

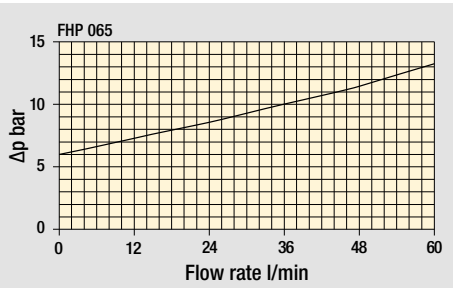

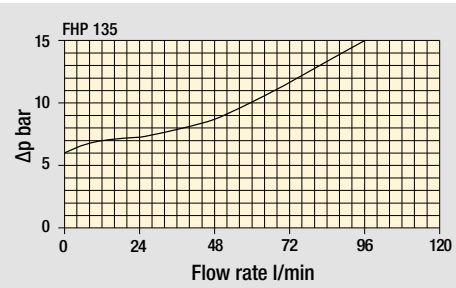

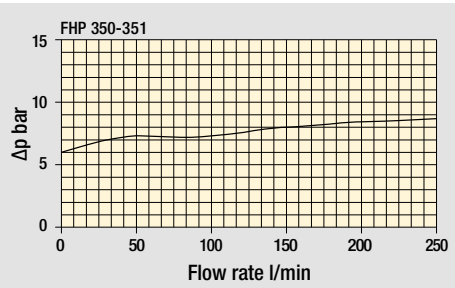

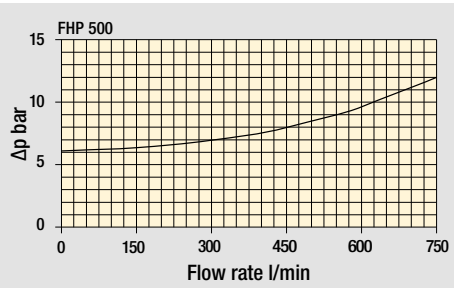

Valves

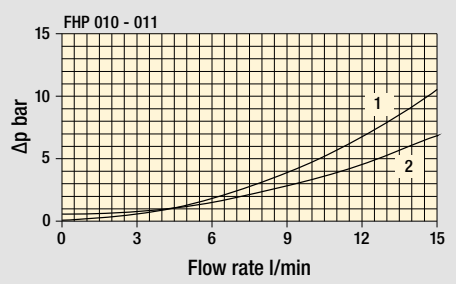

Pressure drop with reverse flow valve in
1 - Filtering direction
2 - Opposite direction

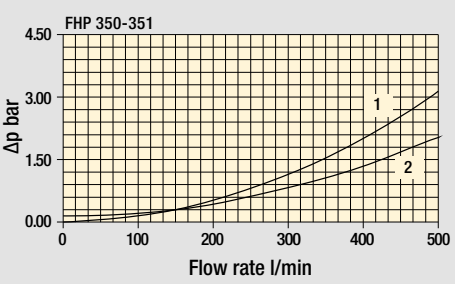

Pressure drop with reverse flow valve in
1 - Filtering direction
2 - Opposite direction

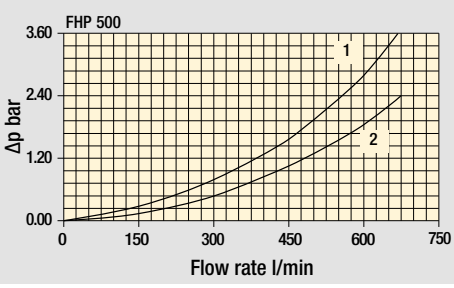

Pressure drop with reverse flow valve in
1 - Opposite direction
2 - Filtering direction

The curves are plotted using mineral oil with density of 0.86 kg/dm³ in compliance with ISO 3968. Δp varies proportionally with density.

Designation & Ordering code

COMPLETE FILTER

Configuration example: FHP350 | 4 | B | A | D | 2 | A06 | N | P01

Series and size
- **FHP350**
- **FHP351**

Length
1 | **2** | **3** | **4**

Valves

S	Without bypass
B	With bypass 6 bar
T	With check valve, without bypass
D	With check valve, with bypass 6 bar
V	With reverse flow, without bypass
Z	With reverse flow, with bypass 6 bar

Seals

A	NBR
V	FPM

Connections

A	G 1 1/2”	**F**	1 1/2” SAE 3000 psi/UNC + SAE 20 - 1 5/8” - 12 UN
B	1 1/2” NPT	**G**	1 1/4” SAE 3000 psi/M
C	SAE 24 - 1 7/8” - 12 UN	**H**	1 1/4” SAE 3000 psi/UNC
D	1 1/2” SAE 3000 psi/M + G 1 1/4”	**I**	1 1/4” SAE 6000 psi/M (bolts M12, IAW ISO 6162-2:2018)
E	1 1/2” SAE 3000 psi/UNC + 1 1/4” NPT	**L**	1 1/4” SAE 6000 psi/UNC

Connection for differential pressure indicator
- **2** With connection

Filtration rating (filter media)

A03	Inorganic microfiber	3 µm
A06	Inorganic microfiber	6 µm
A10	Inorganic microfiber	10 µm
A16	Inorganic microfiber	16 µm
A25	Inorganic microfiber	25 µm
M25	Wire mesh	25 µm

Element Δp		Valves S	B	T	D	V	Z
N	20 bar	-	•	-	-	-	-
R	20 bar	-	-	-	•	-	•
H	210 bar	•	-	-	-	-	-
S	210 bar	-	-	•	-	•	-

Execution		Filter length 1	2	3	4
P01	MP Filtri standard	•	•	•	•
P02	Maintenance from the bottom of the housing	-	-	-	•
Pxx	Customized	-	-	-	-

FILTER ELEMENT

Configuration example: HP320 | 4 | A06 | A | N | P01

Element series and size
- **HP320**

Element length
1 | **2** | **3** | **4**

Filtration rating (filter media)

A03	Inorganic microfiber	3 µm
A06	Inorganic microfiber	6 µm
A10	Inorganic microfiber	10 µm
A16	Inorganic microfiber	16 µm
A25	Inorganic microfiber	25 µm
M25	Wire mesh	25 µm

Seals

A	NBR
V	FPM

Element Δp

N	20 bar
R	20 bar
H	210 bar
S	210 bar

Execution

P01	MP Filtri standard
Pxx	Customized

CLOGGING INDICATORS

See page 786

DEA	Electrical differential pressure indicator
DEM	Electrical differential pressure indicator
DEU	Electrical differential pressure indicator
DLA	Electrical / visual differential pressure indicator
DLE	Electrical / visual differential pressure indicator
DTA	Electronic differential pressure indicator
DTI	I-O Link electronic differential pressure indicator
DVA	Visual differential pressure indicator
DVM	Visual differential pressure indicator

PLUGS

See page 807

T2	Plug (not included)

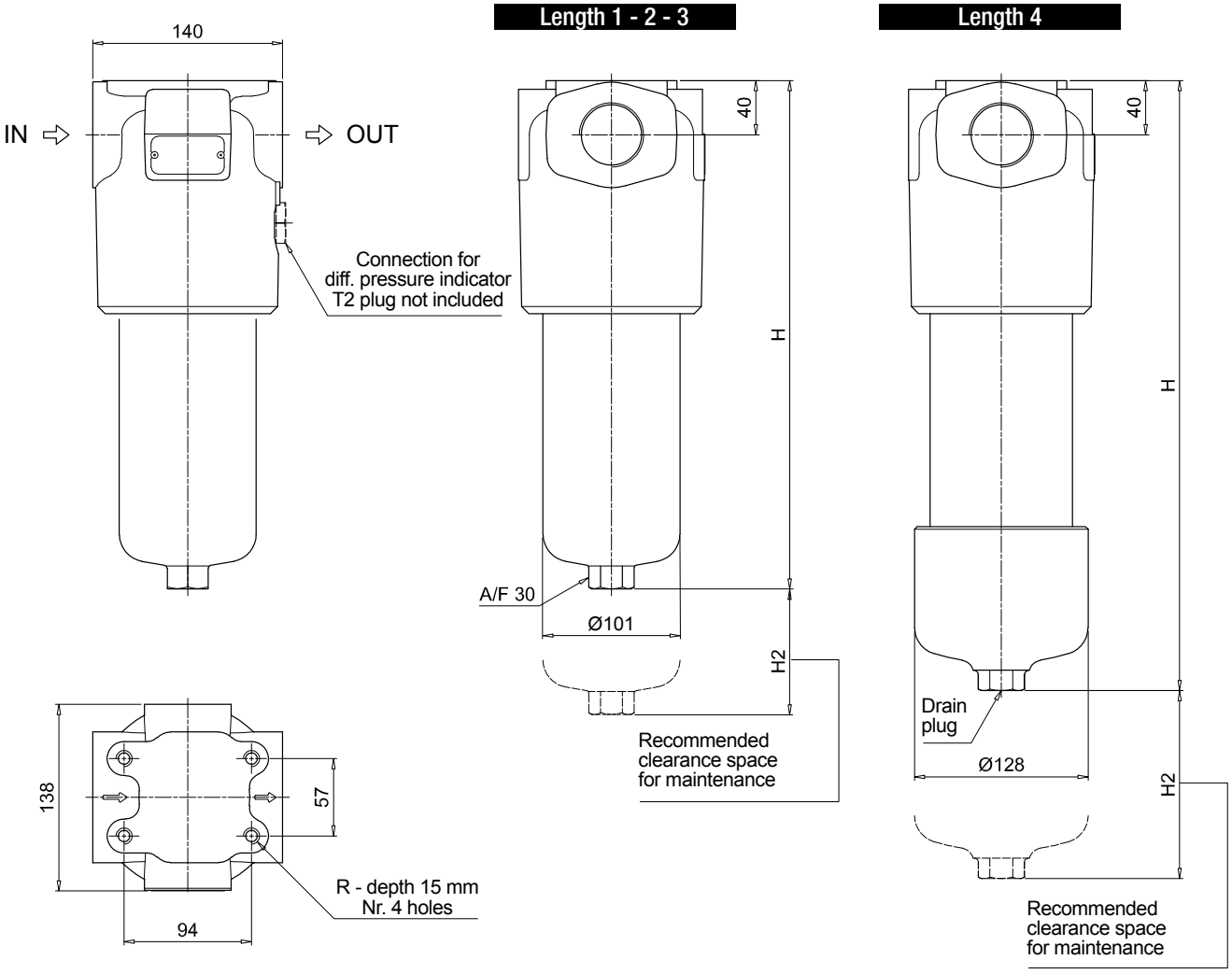

FHP350

Filter length	H [mm]	H2 [mm] Execution P01	H2 [mm] Execution P02
1	295	150	-
2	418	150	-
3	550	150	-
4	703	150	550

Connections	R
A	M12
B - C	1/2" UNC
D	M12
E - F	1/2" UNC
G	M12
H	1/2" UNC
I	M12
L	1/2" UNC

Dimensions

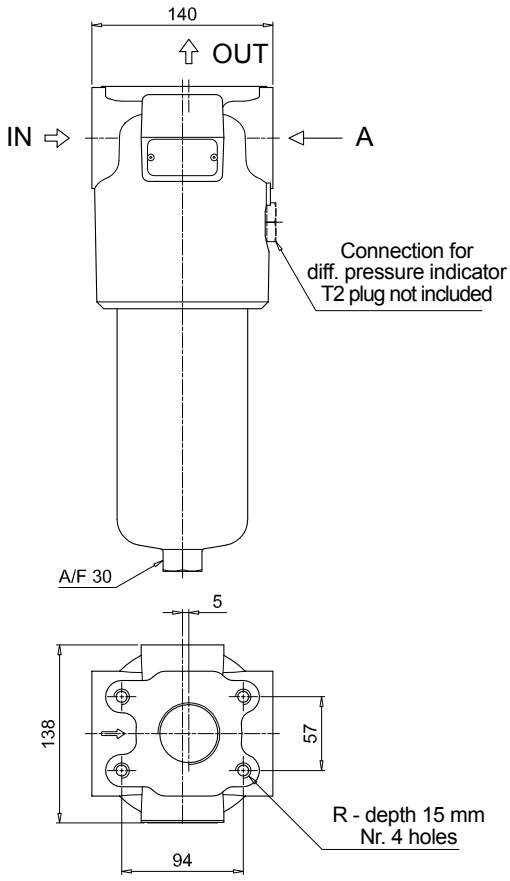

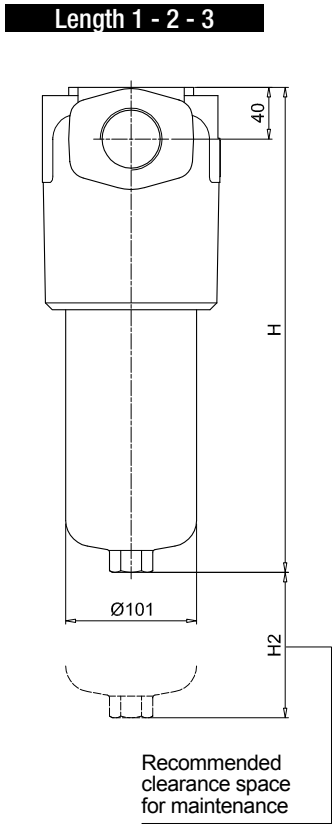

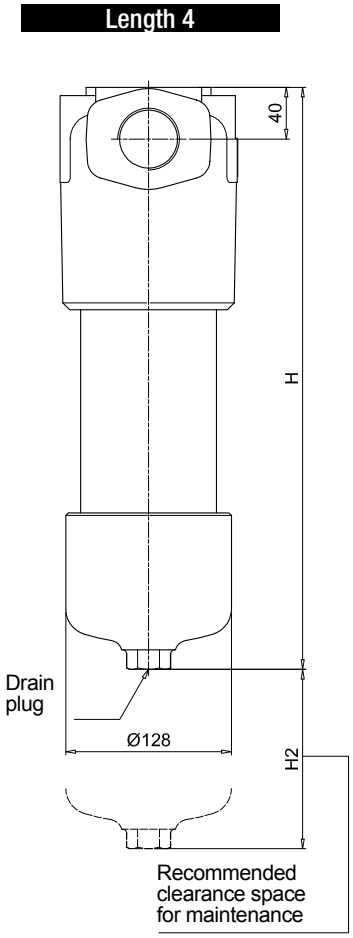

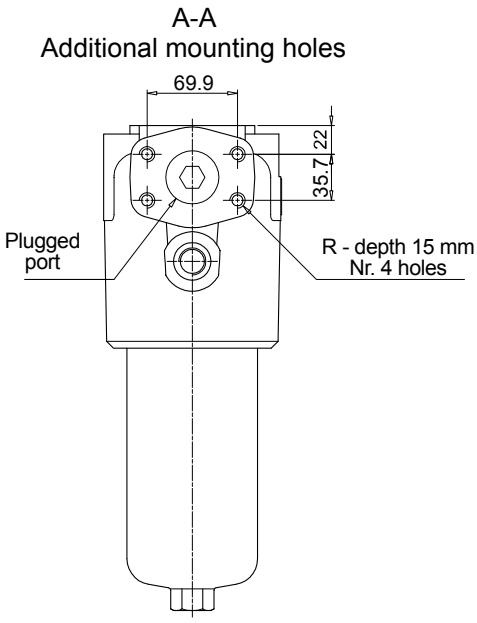

FHP351

Filter length	H [mm]	H2 [mm] Execution P01	H2 [mm] Execution P02
1	295	150	-
2	418	150	-
3	550	150	-
4	703	150	550

Connections	R
A	M12
B - C	1/2" UNC
D	M12
E - F	1/2" UNC
G	M12
H	1/2" UNC
I	M12
L	1/2" UNC

Order number for spare parts

FHP 350	FHP 351	FHP 500

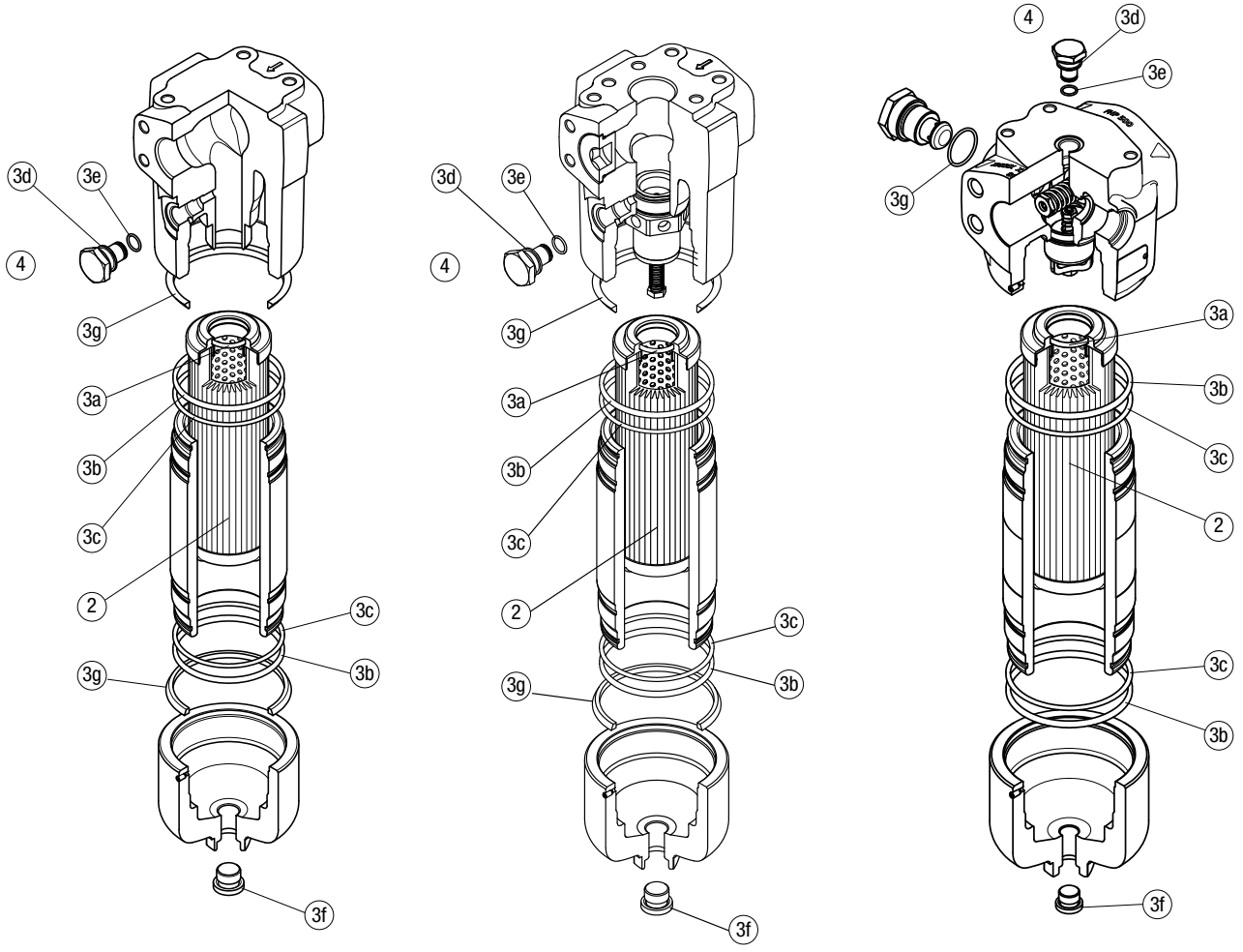

Item:	Q.ty: 1 pc. 2	Q.ty: 1 pc. 3 (3a ÷ 3g for FHP 350) (3a ÷ 3f for FHP 500)		Q.ty: 1 pc. 4	
Filter series	Filter element	Seal Kit code number NBR	Seal Kit code number FPM	Indicator connection plug NBR	Indicator connection plug FPM
FHP 350 - 351	See order table	02050272	02050283	T2H	T2V
FHP 500		02050330	02050331		