# FZP series

**Maximum working pressure up to 42 Mpa (420 bar) - Flow rate up to 160 l/min**



INSTALLATION, SERVICE AND MAINTENANCE MANUAL AND SAFETY INSTRUCTIONS

Please scan or click the QR codes to get updated electronic version of the related document.

FZP039 FZP136

***For all the QR codes: Scan or click me!***

# FZP GENERAL INFORMATION

## Description

Stainless steel high pressure filters

**In-line**
**Maximum working pressure up to 42 Mpa (420 bar)**
**Flow rate up to 160 l/min**

FZP is a range of stainless steel high pressure filter for protection of sensitive components in high pressure hydraulic systems placed in difficult environmental conditions.
They are directly connected to the lines of the system through the hydraulic fittings.

### Available features:

- 1 1/4" female threaded connections, for a maximum flow rate of 160 l/min
- Fine filtration rating, to get a good cleanliness level into the system
- Bypass valve, to relieve excessive pressure drop across the filter media
- Low collapse filter element with external support "R", for filter element protection against the back pressure caused by the check valve or the reverse flow in filters provided with the bypass valve
- High collapse filter element with external support "S", for filter element protection against the back pressure caused by the check valve or the reverse flow in filters not provided with the bypass valve
- High collapse filter element "U", for use with aggressive fluids
- Visual, electrical and electronic differential clogging indicators

### Common applications:

- Off-shore equipment
- Water filtration systems
- Systems with strong or corrosive environmental conditions
- Systems with corrosive fluids

## Technical data

### Filter housing materials

- Head: AISI 316L
- Housing: AISI 316L
- Bypass valve: AISI 316L

### Pressure

- Test pressure: 63 MPa (630 bar)
- Min. Burst pressure: 126 MPa (1260 bar)
- Pulse pressure fatigue test: 1 000 000 cycles with pressure from 0 to 42 MPa (420 bar)

### Bypass valve

Opening pressure 6 bar ±10%

### Filter element features

| Filter | | Filter element | |
|---|---|---|---|
| FZP | | HP | |
| Δp Element type | | | |
| **Element media** | **Construction** | **Δp Series** | **Δp** |
| A - Microfiber | with external support | R | 20 bar |
| | High Δp with external support | S | 210 bar |
| | High Δp with stainless steel components | U | 210 bar |
| *Please see ordering code tables to check element Δp series availability based on filter features.* | | | |
| **Flow direction through the filter element:** From OUT to IN | | | |

| Filter element components materials | Δp Series | | |
|---|---|---|---|
| | R | S | U |
| End cap | Polyamide | Tinned Steel | Stainless steel |
| Core tube | Tinned Steel | Tinned Steel | Stainless steel |
| External support | Wire mesh epoxy painted | Wire mesh epoxy painted | Stainless steel |
| Internal support | Wire mesh epoxy painted | Stainless steel | Stainless steel |
| Pre-filter | Synthetic | Synthetic | Synthetic |

### Seals

- Standard NBR series A (-25 °C to +110 °C)
- Optional FPM series V (-20 °C to +120 °C)
- Optional MFQ series F (-50 °C to +120 °C)

### Temperature

From -50 °C to +120 °C

### Note

FZP filters are provided for vertical mounting

## Weights [kg] and volumes [dm³]

| Filter series | Weights [kg] | | | | | Volumes [dm³] | | | | |
|---|---|---|---|---|---|---|---|---|---|---|
| | Length | 1 | 2 | 3 | 4 | Length | 1 | 2 | 3 | 4 |
| **FZP 039** | | - | 4.5 | 5.1 | 5.6 | | - | 0.19 | 0.26 | 0.34 |
| **FZP 136** | | 8.3 | 10.2 | 11.5 | - | | 0.45 | 0.78 | 1.00 | - |

## Flow rates [l/min]

| | | Filter element design - R Series | | | | | Filter element design - S-U Series | | | | |
|---|---|---|---|---|---|---|---|---|---|---|---|
| Filter series | Length | A03 | A06 | A10 | A16 | A25 | A03 | A06 | A10 | A16 | A25 |
| | **2** | 19 | 25 | 43 | 50 | 59 | 19 | 23 | 41 | 45 | 55 |
| **FZP 039** | **3** | 34 | 37 | 53 | 62 | 74 | 31 | 34 | 48 | 52 | 66 |
| | **4** | 42 | 46 | 63 | 72 | 81 | 38 | 41 | 55 | 71 | 78 |
| | **1** | 63 | 67 | 102 | 108 | 136 | 47 | 53 | 87 | 89 | 127 |
| **FZP 136** | **2** | 95 | 100 | 122 | 123 | 159 | 81 | 95 | 113 | 115 | 138 |
| | **3** | 122 | 124 | 148 | 150 | 160 | 106 | 116 | 135 | 141 | 151 |

**Maximum flow rate for a complete stainless steel high pressure filter with a pressure drop Δp = 1.5 bar.**
The reference fluid has a kinematic viscosity of 30 $mm^2/s$ (cSt) and a density of 0.86 $kg/dm^3$.
For different pressure drop or fluid viscosity we recommend to use our selection software available on www.mpfiltri.com.
You can also calculate the right size using the formulas present on the FILTER SIZING paragraph at the beginning of the full catalogue or at the beginning of the filter family brochure.
Please, contact our Sales Department for further additional information.

## Hydraulic diagram

| Filter series | Style S | Style B | Style T | Style D | Style V | Style Z |
|---|---|---|---|---|---|---|
| **FZP 039** | • | • | • | • | • | • |
| **FZP 136** | • | • | - | - | - | - |

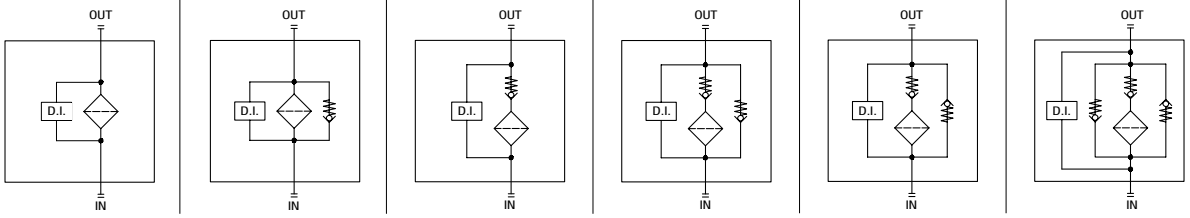


## Pressure drop

Filter housings Δp pressure drop

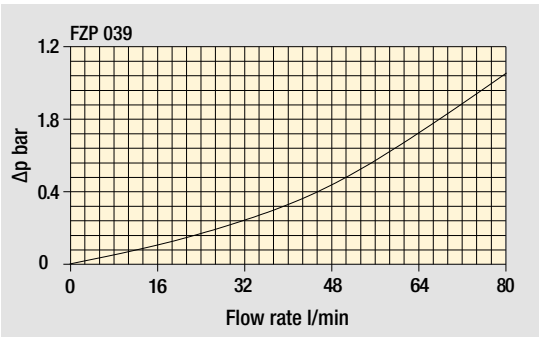


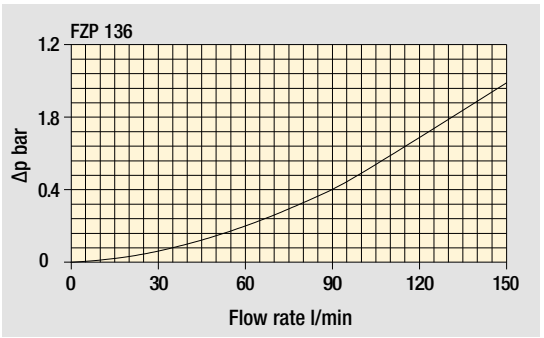


The curves are plotted using mineral oil with density of 0.86 $kg/dm^3$ in compliance with ISO 3968. Δp varies proportionally with density.

## Designation & Ordering code

### COMPLETE FILTER

Configuration example: FZP039 | 2 | B | F | B | 2 | A03 | U | P01

**Series and size**
**FZP039**

**Length**
**2** | **3** | **4**

**Valves**
**S** Without bypass
**B** With bypass 6 bar
**T** With check valve, without bypass
**D** With check valve, with bypass 6 bar
**V** With reverse flow, without bypass
**Z** With reverse flow, with bypass 6 bar

**Seals**
**A** NBR
**V** FPM
**F** MFQ

**Connections**
**A** G 1/2”
**B** 1/2” NPT
**C** SAE 8 - 3/4” - 16 UNF

**Connections for differential pressure indicators**
**1** Without connection
**2** With connection

**Filtration rating (filter media)**
**A03** Inorganic microfiber 3 µm
**A06** Inorganic microfiber 6 µm
**A10** Inorganic microfiber 10 µm
**A16** Inorganic microfiber 16 µm
**A25** Inorganic microfiber 25 µm

| Element Δp | | Valves S | B | T | D | V | Z |
|---|---|---|---|---|---|---|---|
| **R** | 20 bar | - | • | - | • | - | • |
| **S** | 210 bar | • | - | • | - | • | - |
| **U** | 210 bar, stainless steel filter element | • | • | • | • | • | • |

**Execution**
**P01** MP Filtri standard
**Pxx** Customized

### FILTER ELEMENT

Configuration example: HP039 | 2 | A03 | F | U | P01

**Element series and size**
**HP039**

**Element length**
**2** | **3** | **4**

**Filtration rating (filter media)**
**A03** Inorganic microfiber 3 µm
**A06** Inorganic microfiber 6 µm
**A10** Inorganic microfiber 10 µm
**A16** Inorganic microfiber 16 µm
**A25** Inorganic microfiber 25 µm

**Seals**
**A** NBR
**V** FPM
**F** MFQ

| Element Δp | | Valves S | B | T | D | V | Z |
|---|---|---|---|---|---|---|---|
| **R** | 20 bar | - | • | - | • | - | • |
| **S** | 210 bar | • | - | • | - | • | - |
| **U** | 210 bar, stainless steel filter element | • | • | • | • | • | • |

**Execution**
**P01** MP Filtri standard
**Pxx** Customized

### CLOGGING INDICATORS

See page 787

**DEX** Electrical differential pressure indicator
**DLX** Electrical/visual differential pressure indicator
**DVX** Visual differential pressure indicator
**DVY** Visual differential pressure indicator

### PLUGS

See page 807

**X2** Stainless steel plug (not included)

## Dimensions

| FZP039 | |
|---|---|
| **Filter length** | **H [mm]** |
| **2** | 179 |
| **3** | 222 |
| **4** | 266 |

| Connections | R |
|---|---|
| **A** | M6 |
| **B - C** | 1/4" UNC |

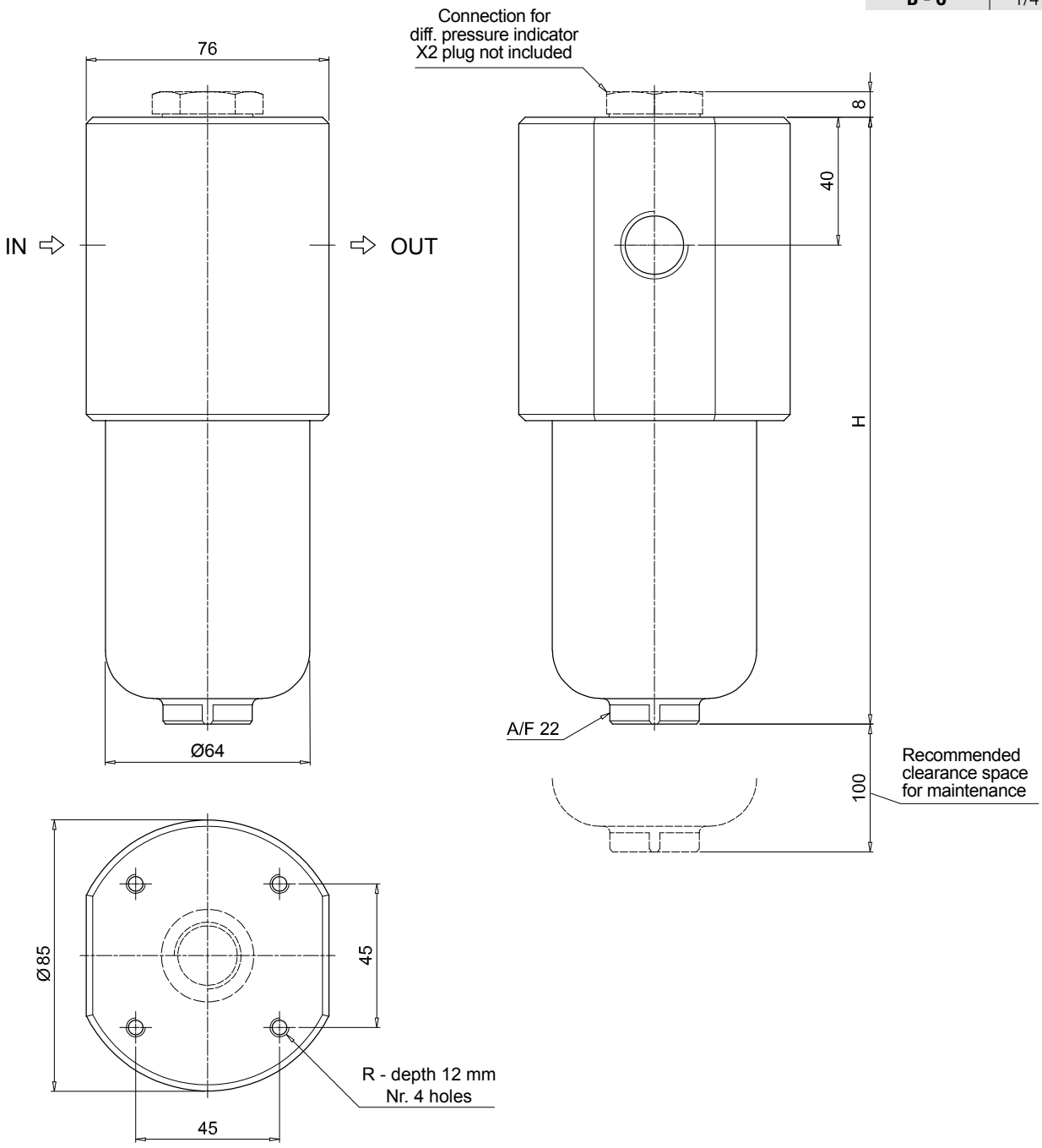

Order number for spare parts

**FZP 039**

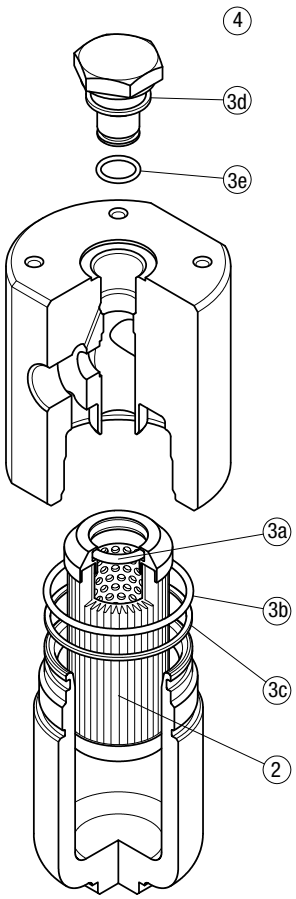


**FZP 136**

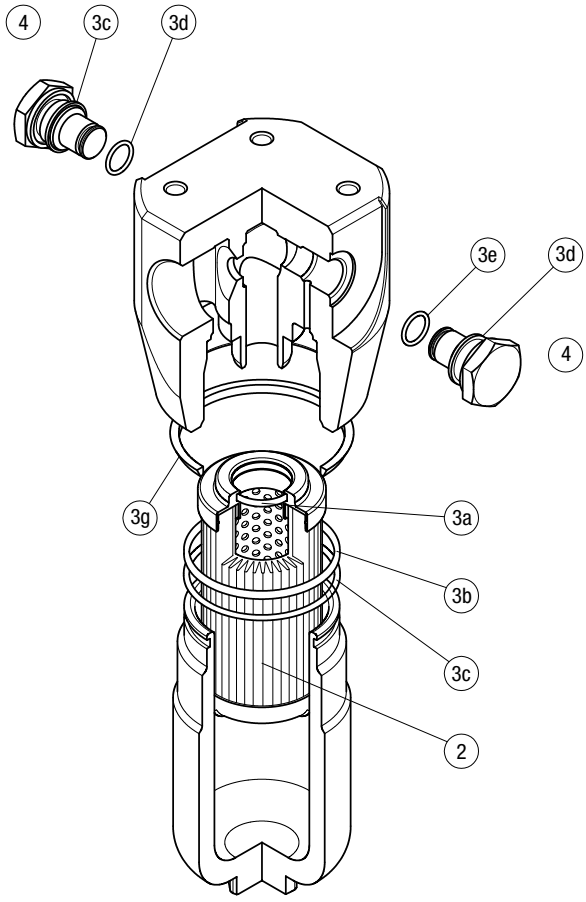


| Item: | Q.ty: 1 pc. (2) | Q.ty: 1 pc. (3) (3a ÷ 3g) | | Q.ty: 1 pc. (4) | |
|---|---|---|---|---|---|
| **Filter series** | **Filter element** | **Seal Kit code number NBR** | **FPM** | **Indicator connection plug NBR** | **FPM** |
| **FZP 039** | See order table | 02050299 | 02050300 | X2H | X2V |
| **FZP 136** | | 02050636 | 02050637 | | |