UNIVERSAL HYDRAULIK®

Your Partner for coolers and systems

Product description

The Hybrid series is a logical further development of a shell & tube heat exchanger for a wide range of industrial applications. Aluminium fins, which are pushed over the tube bundle, connected by force, lead to an increased heat exchange surface. This is why the series is so efficient. The hybrid-design series is able to reach a heat output up to 5000 kW with a smaller footprint than a bare tube cooler.

Product features

- Aluminium fins ensure a larger heat exchange surface
- Heat output capacity up to 5000 kW
- Tube side (Water): flow rate up to 2200 l/min
- Removable end caps for easy cleaning of the tubes
- Max. pressure: oil 35 bar / water 16 bar (higher pressure on demand)
- High-quality materials
- Tested five times during production

Options

- Sea water resistant version
- Certifications for marine applications: Bureau Veritas, ABS, DNVGL, Rina, CCS, TL, PRS, NKK and others
- Compressed-air application
- Completely stainless steel version or chemically nickel plated
- 3.1 certification on request
- Hydrotest on request
- ATEX-certification on request
- ASME-certification on request
- Internal bypass
- Titanium parts
- Fail-safe-version

Materials

	Standard	**Option**	**Sea water** Standard
Shell Mounting Baffels	Steel	Stainless steel (SS)	
Tube sheet	Steel	Stainless steel (SS)	Brass
Cooling fins Nameplate	Aluminium		
Tubes	CuNi 90/10 (CN)	Stainless steel (SS)/ Copper (CU)	Titan or copper nickel
End caps	Cast iron	Stainless steel (SS)	Cast iron (chemically nickel plated) or gun metal with zinc anode

UNIVERSAL HYDRAULIK®
Your Partner for coolers and systems

Unit dimensions SCM-1700-Series

Type	A	B	D	E	F	G	I	K	L	M	N	N1	O	Q	R	T
SCM-1724-O	706	368	188	188	SAE 3"	169	-	-	178	-	-	-	210	16 x 38	G3"	146
SCM-1730-O	859	521	188	188	SAE 3"	169	-	-	178	-	-	-	210	16 x 38	G3"	146
SCM-1736-O	1011	673	188	188	SAE 3"	169	-	-	178	-	-	-	210	16 x 38	G3"	146
SCM-1742-O	1164	826	188	188	SAE 3"	169	-	-	178	-	-	-	210	16 x 38	G3"	146
SCM-1748-O	1316	978	188	188	SAE 3"	169	-	-	178	-	-	-	210	16 x 38	G3"	146
SCM-1754-O	1468	1130	188	188	SAE 3"	169	-	-	178	-	-	-	210	16 x 38	G3"	146
SCM-1760-O	1621	1283	188	188	SAE 3"	169	-	-	178	-	-	-	210	16 x 38	G3"	146
SCM-1766-O	1773	1435	188	188	SAE 3"	169	-	-	178	-	-	-	210	16 x 38	G3"	146
SCM-1772-O	1925	1587	188	188	SAE 3"	169	-	-	178	-	-	-	210	16 x 38	G3"	146
SCM-1776-O	2034	1696	188	188	SAE 3"	169	-	-	178	-	-	-	210	16 x 38	G3"	146
SCM-1778-O	2078	1740	188	188	SAE 3"	169	-	-	178	-	-	-	210	16 x 38	G3"	146
SCM-1784-O	2230	1892	188	188	SAE 3"	169	-	-	178	-	-	-	210	16 x 38	G3"	146
Type	**A**	**B**	**D**	**E**	**F**	**G**	**I**	**K**	**L**	**M**	**N**	**N1**	**O**	**Q**	**R**	**T**
SCM-1724-T	706	368	214	188	SAE 3"	169	100	G2 1/2"	178	-	-	-	210	16 x 38	-	146
SCM-1730-T	859	521	214	188	SAE 3"	169	100	G2 1/2"	178	-	-	-	210	16 x 38	-	146
SCM-1736-T	1011	673	214	188	SAE 3"	169	100	G2 1/2"	178	-	-	-	210	16 x 38	-	146
SCM-1742-T	1164	826	214	188	SAE 3"	169	100	G2 1/2"	178	-	-	-	210	16 x 38	-	146
SCM-1748-T	1316	978	214	188	SAE 3"	169	100	G2 1/2"	178	-	-	-	210	16 x 38	-	146
SCM-1754-T	1468	1130	214	188	SAE 3"	169	100	G2 1/2"	178	-	-	-	210	16 x 38	-	146
SCM-1760-T	1621	1283	214	188	SAE 3"	169	100	G2 1/2"	178	-	-	-	210	16 x 38	-	146
SCM-1766-T	1773	1435	214	188	SAE 3"	169	100	G2 1/2"	178	-	-	-	210	16 x 38	-	146
SCM-1772-T	1925	1587	214	188	SAE 3"	169	100	G2 1/2"	178	-	-	-	210	16 x 38	-	146
SCM-1776-T	2034	1696	214	188	SAE 3"	169	100	G2 1/2"	178	-	-	-	210	16 x 38	-	146
SCM-1778-T	2078	1740	214	188	SAE 3"	169	100	G2 1/2"	178	-	-	-	210	16 x 38	-	146
SCM-1784-T	2230	1892	214	188	SAE 3"	169	100	G2 1/2"	178	-	-	-	210	16 x 38	-	146
Type	**A**	**B**	**D**	**E**	**F**	**G**	**I**	**K**	**L**	**M**	**N**	**N1**	**O**	**Q**	**R**	**T**
SCM-1724-F	706	368	214	188	SAE 3"	169	-	-	178	G2"	108	36	210	16 x 38	-	146
SCM-1730-F	859	521	214	188	SAE 3"	169	-	-	178	G2"	108	36	210	16 x 38	-	146
SCM-1736-F	1011	673	214	188	SAE 3"	169	-	-	178	G2"	108	36	210	16 x 38	-	146
SCM-1742-F	1164	826	214	188	SAE 3"	169	-	-	178	G2"	108	36	210	16 x 38	-	146
SCM-1748-F	1316	978	214	188	SAE 3"	169	-	-	178	G2"	108	36	210	16 x 38	-	146
SCM-1754-F	1468	1130	214	188	SAE 3"	169	-	-	178	G2"	108	36	210	16 x 38	-	146
SCM-1760-F	1621	1283	214	188	SAE 3"	169	-	-	178	G2"	108	36	210	16 x 38	-	146
SCM-1766-F	1773	1435	214	188	SAE 3"	169	-	-	178	G2"	108	36	210	16 x 38	-	146
SCM-1772-F	1925	1587	214	188	SAE 3"	169	-	-	178	G2"	108	36	210	16 x 38	-	146
SCM-1776-F	2034	1696	214	188	SAE 3"	169	-	-	178	G2"	108	36	210	16 x 38	-	146
SCM-1778-F	2078	1740	214	188	SAE 3"	169	-	-	178	G2"	108	36	210	16 x 38	-	146
SCM-1784-F	2230	1892	214	188	SAE 3"	169	-	-	178	G2"	108	36	210	16 x 38	-	146

All dimensions in mm

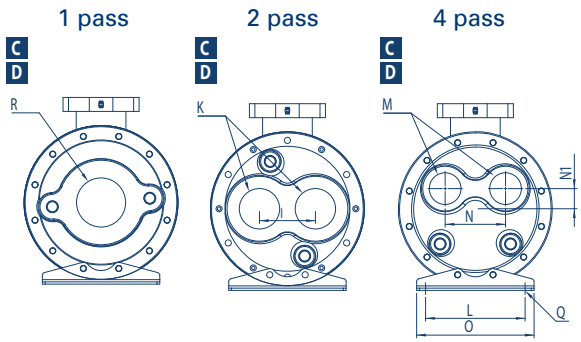

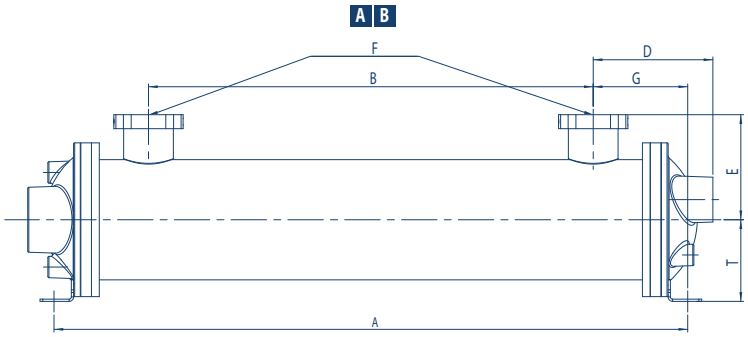

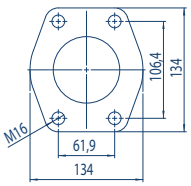

A - Medium to be cooled
B - Cooled Medium
C - Cooling water „inlet“
D - Cooling water „outlet“

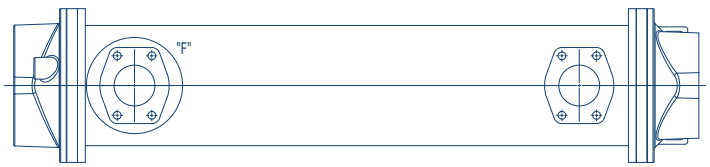

Technical data

Caution: Incorrect installation can lead to damage to the cooler.
For the seawater version, zinc anodes should be provided on the waterside.
Exact information for the pressure resistance can be found in the respective component drawings.

Maximum operating Pressure
Shell = up to 35 bar
Tubes = up to 16 bar
Operating temperature = 5 - 95 °C

Maximum flow rate (in l/min):

	Oil Shell	**Water** Tubes CuNi 90/10 (CN)/Stainless steel (SS)		
Type		**O**	**T**	**F**
EKM - 500	75	60	30	-
EKM - 700	225	120	60	30
EKM - 1000	330	280	140	70
EKM - 1200	650	560	280	140
EKM - 1400	850	520	260	130
EKM - 1700	1200	980	490	245

	Oil Shell	**Water** Tubes Copper (CU)			**Water** Tubes CuNi 90/10 (CN)/ Stainless steel (SS)			**Sea water** Tubes CuNi 90/10 (CN)		
Type		**O**	**T**	**F**	**O**	**T**	**F**	**O**	**T**	**F**
SCM - 1000	330	225	110	55	340	170	85	285	140	70
SCM - 1200	650	500	250	125	750	375	185	600	300	150
SCM - 1700	1200	850	425	213	1300	650	325	1050	530	265
SCM - 2400	1800	1600	800	400	2400	1200	600	2000	1000	500
SCM - 4000	3000	2400	1200	600	3500	1750	875	2800	1400	700

	Oil Shell	**Water** Tubes Copper (CU)		**Water** Tubes CuNi 90/10 (CN)/ Stainless steel (SS)		**Sea water** Tubes CuNi 90/10 (CN)	
Type	**O**	**T**	**F**	**T**	**F**	**T**	**F**
UKTM/UKM - 500	75	17	-	26	-	22	-
UKTM/UKM - 700	225	34	16	52	24	43	21
UKTM/UKM - 1000	400	82	40	122	58	102	51
UKTM/UKM - 1200	650	182	91	227	136	227	114

The technical data of this sheet is depending on the described operational conditions and individual cases.
At different operational conditions and differing individual cases contact UniversalHydraulik.
Technical modifications reserved. Please also pay attention to our operation manuals and maintenance documentations.
In case of an order, binding dimensions can be found in the associated component drawing.

advanced quality
customized designs
made in europe and usa

UNIVERSAL HYDRAULIK®
Your Partner for coolers and systems

Ordering code

SS - EKM - 1036 - 6 - O - CN - R - W - SW (S:G112 - T:G114)

Complete cooler Stainless steel
incl. Aluminium Fins

Series abbreviation
EKM-Series
SCM-Series
UKM-Series
UKTM-Series

R = removabel cartridge

Unit size

Guide segment distance

Cooling water connection system
O= 1-pass
T= 2-pass
F= 4-pass

Tube material
CN= Copper nickel
CU= Copper
SS= Stainless steel

Bypass version
R/R2 = partly opened (depends on the mountening)
RS/RS2 = fully opened (depends on the mountening)

Material of the tube sheet
W = Brass
SS = Stainless steel
Without data = Steel

Material of end caps
SW = Cast iron (nickel coating treatment)
SWBZ = Sea water resistant gun metal end caps + zinc anode
SS = Stainless steel
Without data = Cast iron or steel

Connection shell side
see following page

Connection tube side
see following page

EKM-Serie:	Heat exchanger with straight water tubes inside. Available in sizes 500-1700.
SCM-Serie:	Heat exchanger with straight water tubes and increased tube diameters inside. Available in sizes 1000-4000.
UKM-Serie:	Heat exchanger with U-formed water tubes inside. Available in sizes 500-1200.
UKTM-Serie:	Heat exchanger with U-formed water tubes inside for mounting in tanks. Available in sizes 500-1200.

advanced quality
customized designs
made in europe and usa

UNIVERSAL HYDRAULIK®
Your Partner for coolers and systems

Connection designation

EKM - 1036 - O - CN (S:G112 - T:G114)

Type code acc. UH-data sheet
(see previous page)

Connection type and connection size, shell side

Connection type and connection size, tube side

Connection table

G BSPP thread:	N NPT thread:	# SAE-Port with UNF:	S SAE flange:
G1/8" = G18	1/8"NPT = N18	7/16-20 UNF = #4	3/4"-3000psi = S34
G1/4" = G14	1/4"NPT = N14	1/2-20 UNF = #5	1"-3000psi = S1
G3/8" = G38	3/8"NPT = N38	9/16-18 UNF = #6	1 1/4"-3000psi = S114
G1/2" = G12	1/2"NPT = N12	3/4-16 UNF = #8	1 1/2"-3000psi = S112
G3/4" = G34	3/4"NPT = N34	7/8-14 UNF = #10	2"-3000psi = S2
G1" = G1	1"NPT = N1	1-1/16-12 UN = #12	2 1/2"-3000psi = S212
G1 1/4" = G114	1 1/4"NPT = N114	1-3/16-12 UN = #14	3"-3000psi = S3
G1 1/2" = G112	1 1/2"NPT = N112	1-5/16-12 UN = #16	4"-3000psi = S4
G2" = G2	2"NPT = N2	1-5/8-12 UN = #20	5"-3000psi = S5
		1-7/8-12 UN = #24	
		2-1/2-12 UN = #32	

D DIN flange:	D DIN flange:	A ANSI flange:	A ANSI flange:
DN20/PN16 = D20/16	DN20/PN40 = D20/40	1/2"-150lbs = A12/15	1/2"-300lbs = A12/3
DN25/PN16 = D25/16	DN25/PN40 = D25/40	3/4"-150lbs = A34/15	3/4"-300lbs = A34/3
DN32/PN16 = D32/16	DN32/PN40 = D32/40	1"-150lbs = A1/15	1"-300lbs = A1/3
DN40/PN16 = D40/16	DN40/PN40 = D40/40	1 1/4"-150lbs = A114/15	1 1/4"-300lbs = A114/3
DN50/PN16 = D50/16	DN50/PN40 = D50/40	1 1/2"-150lbs = A112/15	1 1/2"-300lbs = A112/3
DN65/PN16 = D65/16	DN65/PN40 = D65/40	2"-150lbs = A2/15	2"-300lbs = A2/3
DN80/PN16 = D80/16	DN80/PN40 = D80/40	2 1/2"-150lbs = A212/15	2 1/2"-300lbs = A212/3
DN100/PN16 = D100/16	DN100/PN40 = D100/40	3"-150lbs = A3/15	3"-300lbs = A3/3
DN125/PN16 = D125/16	DN125/PN40 = D125/40	4"-150lbs = A4/15	4"-300lbs = A4/3
DN150/PN16 = D150/16	DN150/PN40 = D150/40	5"-150lbs = A5/15	5"-300lbs = A5/3
DN200/PN16 = D200/16	DN200/PN40 = D200/40		

Sales

Universal Hydraulik GmbH
Siemensstr. 33 · D-61267 Neu-Anspach
Tel.: +49 (0) 60 81 / 94 18 - 0 · Fax +49 (0) 60 81 / 94 18 49
E-Mail: info@universalhydraulik.com
www.universalhydraulik.com

Universal Hydraulik USA, Corp.
Fort Meigs Business Center · 25651 Fort Meigs Road, Suite A
Perrysburg, OH 43551
Phone: 419 873 63 40 · Fax: 419 873 63 42
email: info@universalhydraulik.com
www.universalhydraulik-usa.com

UH-K000.032/0419