# HSE inlet sections

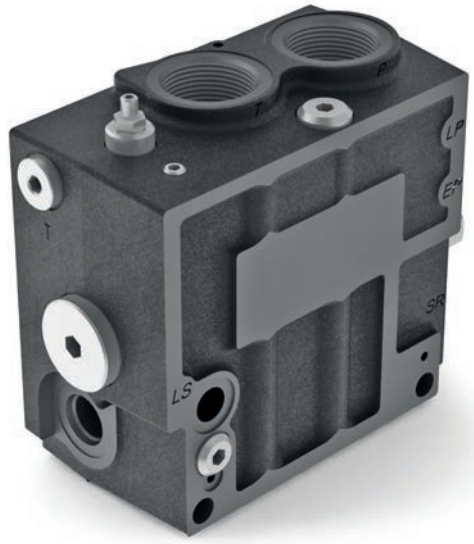

**Features**

- Hydraulic features: see page C-8.
- Connections: P, T: G 1” BSPP or 1 5/16” - 12UN - 2B.
- Connessione Ls: 1/4” BSPP or 7/16” - 20UNF-2B.
- Cast iron body.



## HSE for purely mechanically activated valves

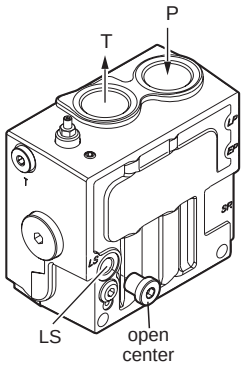


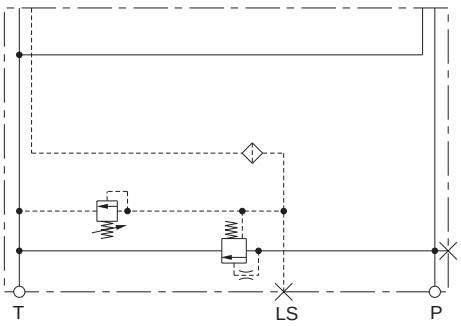


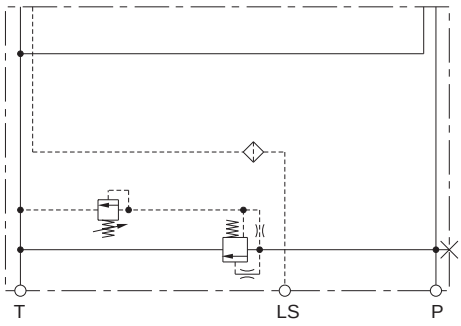


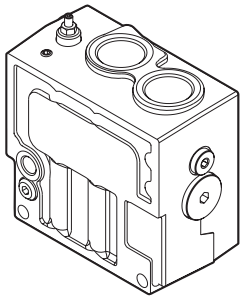

**Open center circuit for fixed displacement pumps**

| Code | |
|---|---|
| **BSPP** | **UN - UNF** |
| **HSE0007701205** | **HSE0007701210** |

**Closed center circuit for load sensing pumps**

| Code | |
|---|---|
| **BSPP** | **UN - UNF** |
| **HSE0007701255** | **HSE0007701260** |

**For purely mechanically activated valves.**
**HSER pump unloading valve. Prearranged for CRP04HP, HSET, HSEA.**

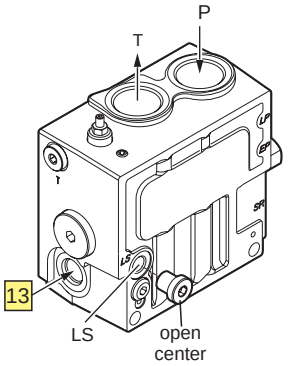


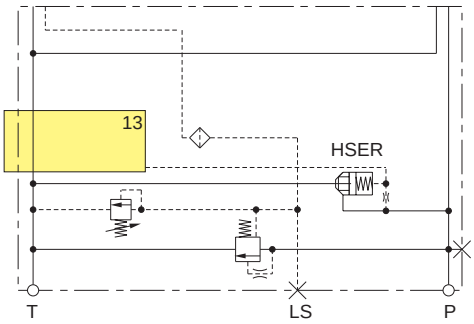


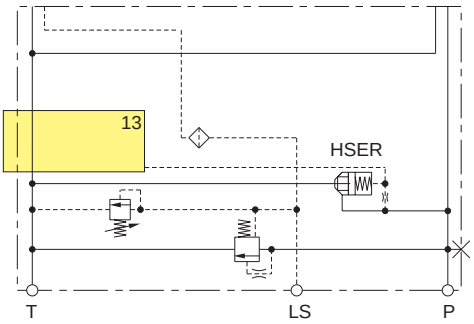


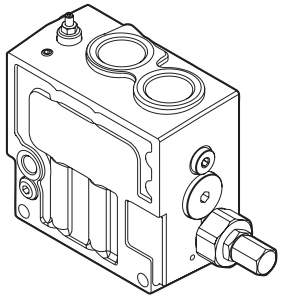

**Open center circuit for fixed displacement pumps**

| Code | |
|---|---|
| **BSPP** | **UN - UNF** |
| **HSE0007701213** | **HSE0007701214** |

**Closed center circuit for load sensing pumps**

| Code | |
|---|---|
| **BSPP** | **UN - UNF** |
| **HSE0007701223** | **HSE0007701224** |

**For electrically activated valves.With pilot oil supply Lp.**

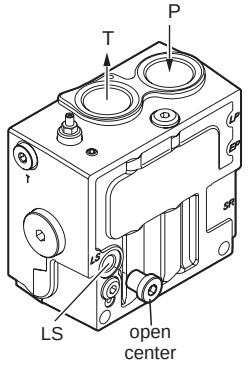


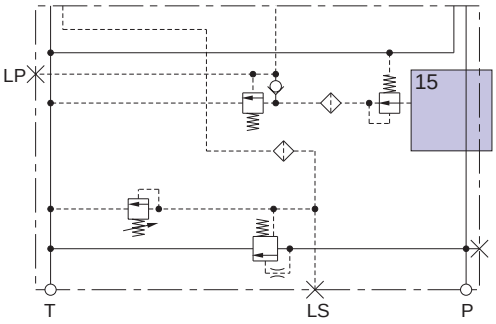


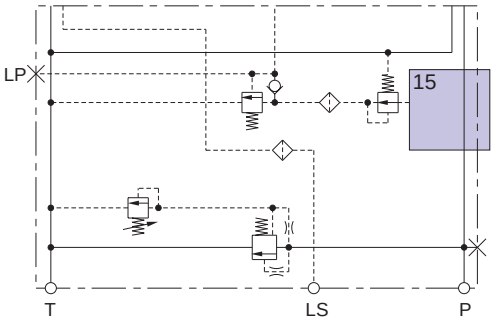


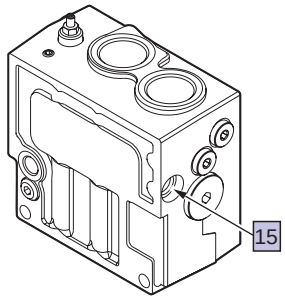


**Open center circuit for fixed displacement pumps**

| Code | | LP(*) | |
|---|---|---|---|
| **BSPP** | **UN - UNF** | bar | psi |
| **HSE0007701225** | **HSE0007701230** | 22 | 319 |
| **HSE0007701286** | **HSE0007701288** | 30 | 435 |
| **HSE0007701287** | **HSE0007701289** | 36 | 522 |

**Closed center circuit for load sensing pumps**

| Code | | LP(*) | |
|---|---|---|---|
| **BSPP** | **UN - UNF** | bar | psi |
| **HSE0007701265** | **HSE0007701270** | 22 | 319 |
| **HSE0007701306** | **HSE0007701330** | 30 | 435 |
| **HSE0007701307** | **HSE0007701331** | 36 | 522 |

13 15 *Seats, see accessories tables from page C-40.*

*(*) LP = Pilot pressure oil supply. If not specified 22 bar [319 psi]*

**For electrically activated valves. With pilot oil supply.**
**Prearranged for valves CRP04HP, HSET, HSEA**

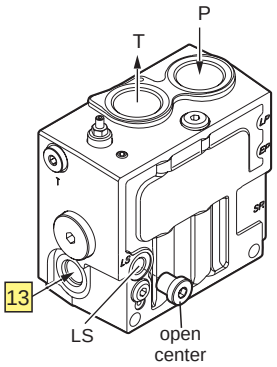


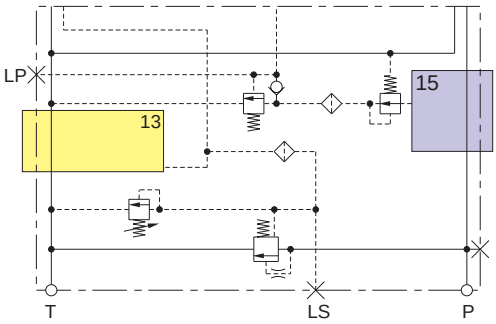


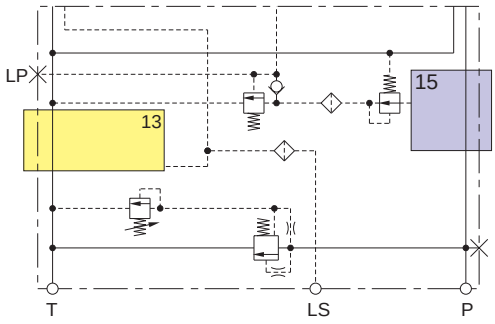


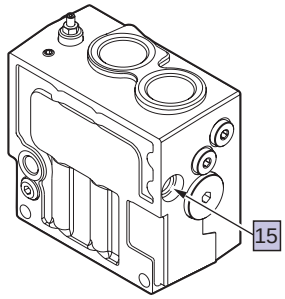


**Open center circuit for fixed displacement pumps**

| Code | | LP(*) | |
|---|---|---|---|
| BSPP | UN - UNF | bar | psi |
| HSE0007701235 | HSE0007701240 | 22 | 319 |
| HSE0007701290 | HSE0007701296 | 30 | 435 |
| HSE0007701291 | HSE0007701297 | 36 | 522 |

**Closed center circuit for load sensing pumps**

| Code | | LP(*) | |
|---|---|---|---|
| BSPP | UN - UNF | bar | psi |
| HSE0007701275 | HSE0007701280 | 22 | 319 |
| HSE0007701332 | HSE0007701334 | 30 | 435 |
| HSE0007701333 | HSE0007701335 | 36 | 522 |

HPV 77

**For electrically activated valves.**
**With pilot oil supply. For system with 2 inlet sections supplied by 1 pump only.**

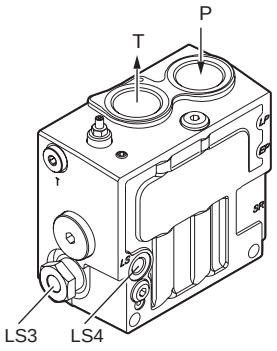


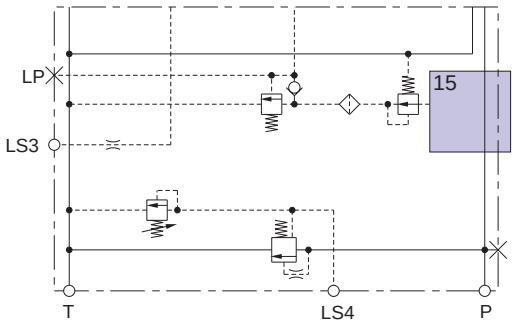


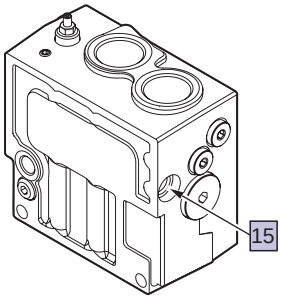


**Open center circuit for fixed displacement pumps**

| Code | | LP(*) | |
|---|---|---|---|
| BSPP | UN - UNF | bar | psi |
| HSE0007701237 | * | 22 | 319 |
| HSE0007701294 | * | 30 | 435 |
| HSE0007701295 | * | 36 | 522 |

** available on request*

13 15 *Seats, see accessories tables from page C-40.*

*(*) LP = Pilot pressure oil supply. If not specified 22 bar [319 psi]*

# HSE inlet sections



**For electrically activated valves. With pilot oil supply.**
**HSER pump unloading valve. Prearranged for CRP04HP, HSET, HSEA.**

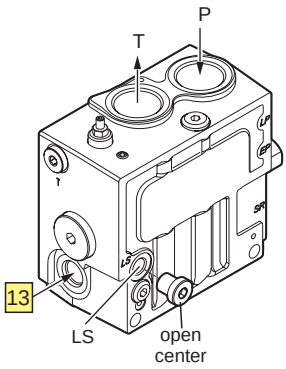


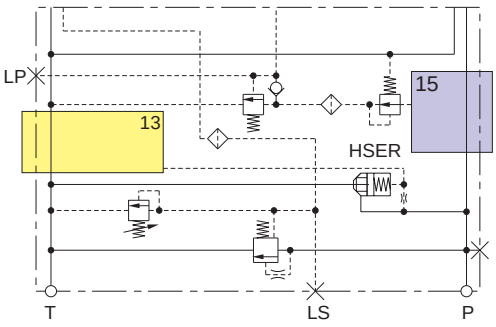


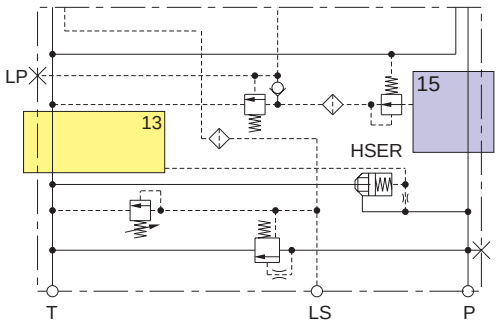


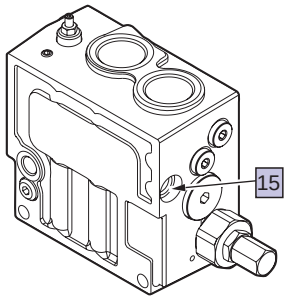


**Open center circuit for fixed displacement pumps**

| Code | | LP(*) | |
|---|---|---|---|
| BSPP | UN - UNF | bar | psi |
| HSE0007701204 | HSE0007701206 | 22 | 319 |
| HSE0007701282 | HSE0007701284 | 30 | 435 |
| HSE0007701283 | HSE0007701285 | 36 | 522 |

**Closed center circuit for load sensing pumps**

| Code | | LP(*) | |
|---|---|---|---|
| BSPP | UN - UNF | bar | psi |
| HSE0007701264 | HSE0007701266 | 22 | 319 |
| HSE0007701303 | HSE0007701308 | 30 | 435 |
| HSE0007701304 | HSE0007701309 | 36 | 522 |

**Constant pressure inlet section. For electrically activated valves.**
**Prearranged for HSEVX and CUT-OFF pump. ATEX version.**

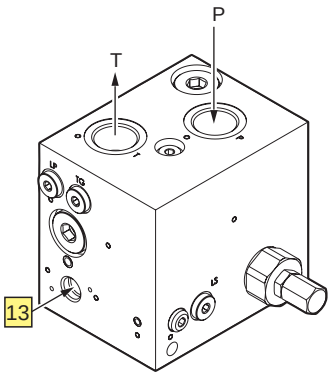


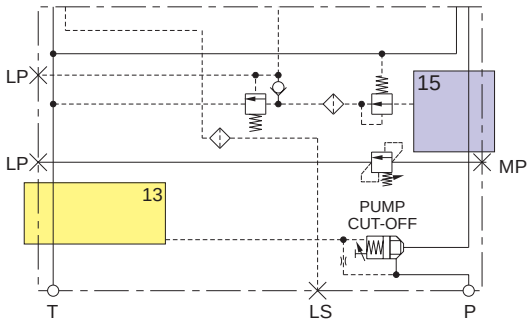


13 *: can be assembled only with the electrical valves ATEX type HSEVX.*
*Stay bolts kit, please contact our sales department.*

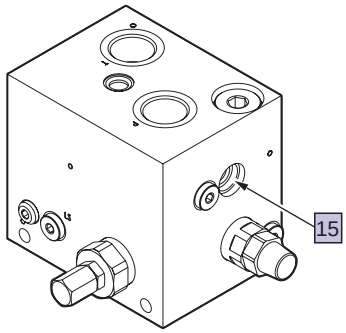


**Open center circuit for fixed displacement pumps**

| Code BSPP | LP(*) | |
|---|---|---|
| | bar | psi |
| HSE0007701400 | 22 | 319 |

13 15 *Seats, see accessories tables from page C-40.*

*(*) LP = Pilot pressure oil supply. If not specified 22 bar [319 psi]*

**HSE inlet module overall dimensions**

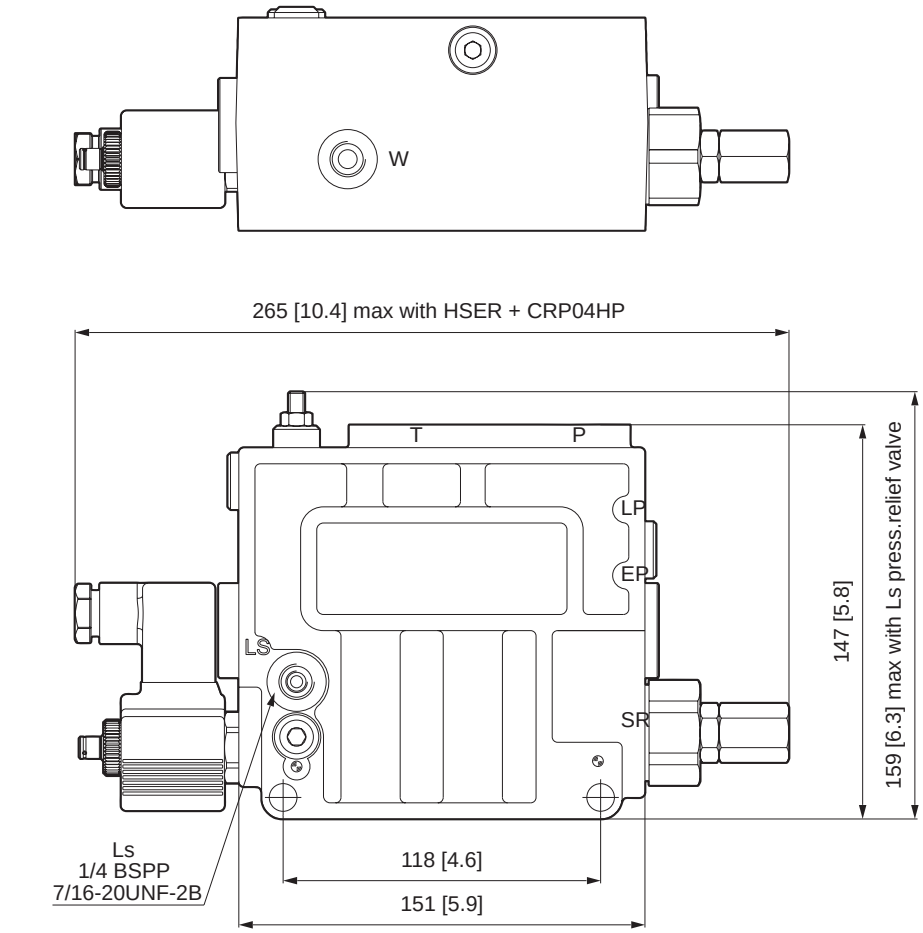


mm [inch]

# Technical data



**General features**

The HPV proportional valves are proportional directional valves with two functional characteristics:

- Directional regulation.
- Flow regulation insensitive to the variation of the load applied to the actuator.

They can be remotely controlled and represent the most advanced technology in the world of applied hydraulics.

Proportional distributors differ in “open center” and “closed center”:

- Proportional open center distributors are used with fixed displacement pumps.
- The closed center proportional valves are used with variable displacement pumps with load sensing control.

**Hydraulic features**

The hydraulic features reported below were measured using a mineral based hydraulic oil according to DIN 51524 or ISO 6743/4 with a viscosity of 25 mm²/s [130 SUS] at a temperature of 50 °C [122 °F]

| | | | | |
|---|---|---|---|---|
| Rated flow | HSE inlet section, P port | | 250 l/min | 66 US gpm |
| | Mid inlet section, HFLS HPV77-HPV77 | | 390 l/min | 103 US gpm |
| | Mid inlet section, HFLS HPV77-HPV41 | | 340 l/min | 90 US gpm |
| | A, B ports with pressure compensator | | 190 l/min | 50 US gpm |
| | A, B ports without pressure compensator | | 220 l/min | 58 US gpm |
| Max. working pressure | Connection P / P port | Pressure relief valve setting | 400 bar | 5800 psi |
| | | Working pressure | 370 bar | 5370 psi |
| | Ports A, B | | 370 bar | 5370 psi |
| | Connection Y | | to tank | |
| | Connection T | Static | 25 bar | 363 psi |
| | | Dynamic | 35 bar | 508 psi |
| Max. pilot pressure oil supply | | | 18 ÷ 36 bar | 260 ÷ 520 psi |
| Oil temperature | Recommended | | -30 ÷ 60 °C | -22 ÷ +140 °F |
| | Min. | | -25 °C | -13 °F |
| | Max. | | +80 °C | +176 °F |
| Ambient temperature | | | -30 ÷ 60 °C | -22 ÷ +140 °F |
| Viscosiy | Recommended | | 12 ÷ 80 mm²/s (cSt) | |
| | Min. | | 4 mm²/s (cSt) | |
| | Max. | | 460 mm²/s (cSt) | |
| Filtering | Max. contamination: class 9 according to NAS 1638 (20/18/15 according to ISO 4406) | | | |
| Stroke | Spool stroke | | ± 8 mm | ± 0.315 in |
| | Proportional | | ± 6.5 mm | ± 0.256 in |
| Dead band | | | ± 1.5 mm | ± 0.059 in |
| Nominal internal leakage at 180 bar (2611 psi) | A, B → T | Without anti-shock valves | 28 cm³/min | 1.71 in³/min |
| | | With anti-shock valves | 34 cm³/min | 2.07 in³/min |

HPV 77 internal (easy replacement) filters, mesh 100 µm.
Mineral oil hydraulic fluid: according to DIN 51524 and 51525 or ISO 6743/4. HPV 77 can also be used with phosphorous esters (HFDR), water-glycol /HFC) or water-oil (HFB) mixes, subject to our Technical Dept. approval.

| **Hydraulic control - MHPH module** | | | |
|---|---|---|---|
| Pilot pressure | Start | 4.5 bar | 65 psi |
| | End stroke | 15 bar | 218 psi |
| Max. pilot pressure | | 30 bar | 436 psi |

# Technical data

**Characteristic curves**

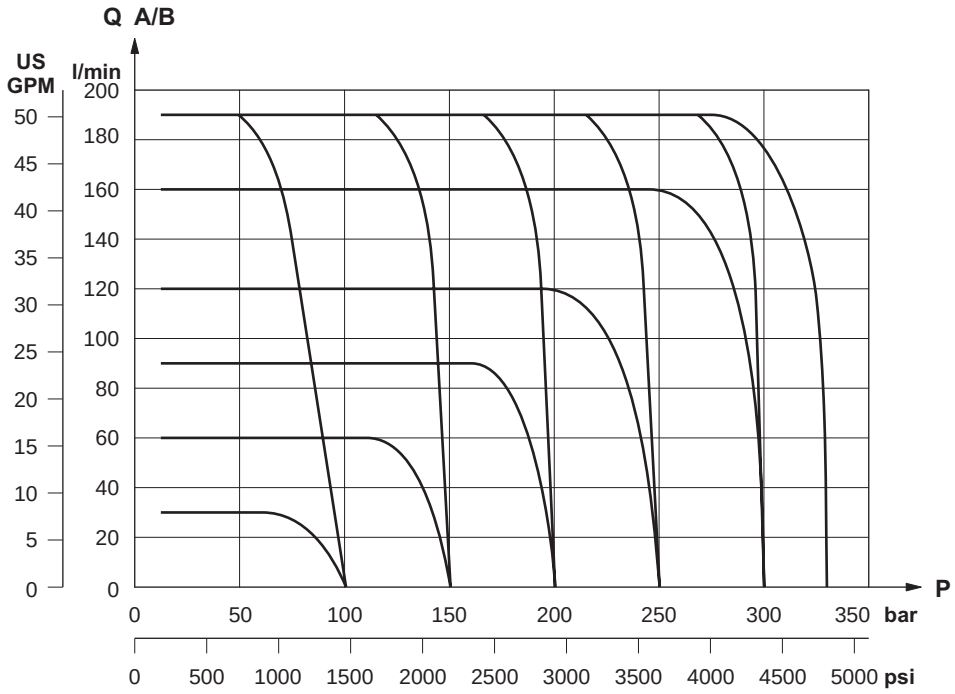


Flow characteristics at A / B ports with pressure limitation on the same (section with pressure compensator)

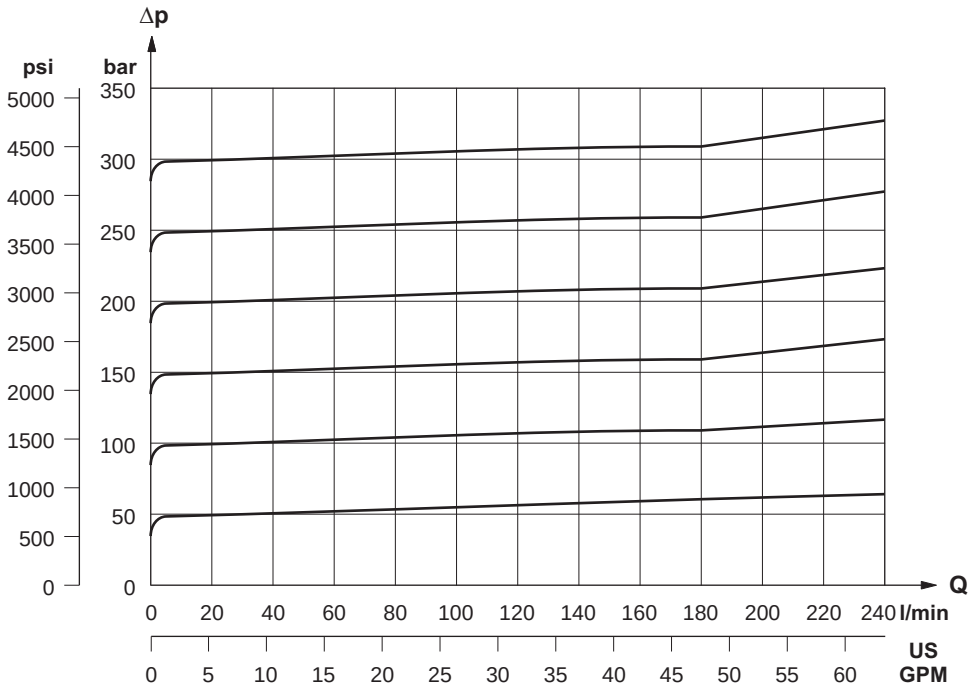


Characteristics of main pressure relief valve

**Curves measured with oil viscosity of 25 mm²/s (cSt) at a temperature of 50 °C [122 °F]**