MPHC series

Maximum working pressure up to 1 MPa (10 bar) - Flow rate up to 3500 l/min



Flow rates [l/min]

Filter series	Length	Filter element design - D series					Filter element design - D series		
		A0003	A0006	A0010	A0016	A0025	M0025 M0060 M0090	P0010	P0025
MPHC 110-114 116-120	1	26	29	72	79	107	282	164	190
	2	43	46	112	114	161	318	164	190
	3	64	72	132	156	178	324	219	251
	4	90	99	184	198	216	324	266	302
	5	117	128	201	219	244	324	282	318
MPHC 250	1	93	102	210	251	315	1093	339	383
	2	124	151	327	412	421	1122	460	514
	3	189	221	418	445	500	1137	544	616
	4	261	304	592	670	766	1166	832	923
MPHC 630	1	160	200	369	423	518	1894	565	632
	2	240	257	571	611	1045	1929	1137	1285
	3	330	374	745	788	1308	1938	1416	1577
	4	374	403	887	1010	1348	1956	1448	1612
	5	625	698	1210	1257	1723	2121	1839	1929
MPHC 660	4	370	399	903	1042	1460	2376	1596	1830
	5	624	699	1282	1343	1997	2663	2182	2331
MPHC 850	1	775	1041	1246	1568	2242	3311	2371	2625
	2	1176	1522	1682	1747	2449	3378	2684	2886
	3	1490	1914	1995	2014	3035	3405	3144	3220
	4	1668	2088	2305	2363	3169	3517	3272	3378

Maximum flow rate for a complete return filter with a pressure drop Δp = 0.5 bar.
The reference fluid has a kinematic viscosity of 30 mm^2/s (cSt) and a density of 0.86 kg/dm^3.
For different pressure drop or fluid viscosity we recommend to use our selection software available on www.mpfiltri.com.
You can also calculate the right size using the formulas present on the FILTER SIZING paragraph at the beginning of the full catalogue or at the beginning of the filter family brochure.
Please, contact our Sales Department for further additional information.

Hydraulic diagram

Filter series	Single IN Port	Double IN Port	Triple IN port
MPHC 110	•	•	-
MPHC 114	•	-	-
MPHC 116	•	-	-
MPHC 120	•	•	•
MPHC 250	•	•	-
MPHC 630	•	•	-
MPHC 660	•	-	-
MPHC 850	•	•	-
17 / 25 with bypass 1.75 / 2.5 bar	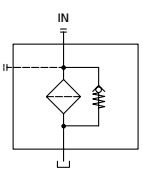	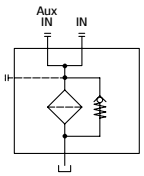	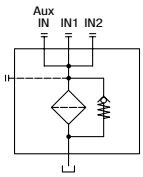
00 without bypass	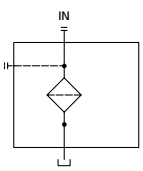	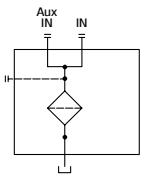	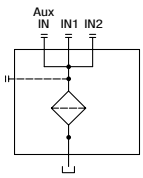

Pressure drop

Filter housings Δp pressure drop

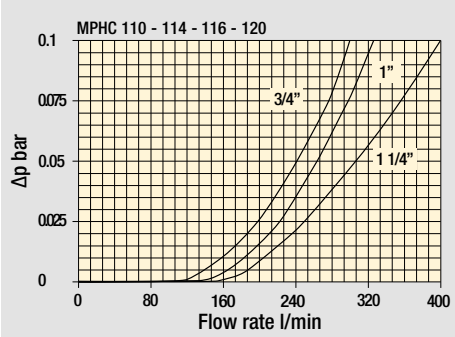

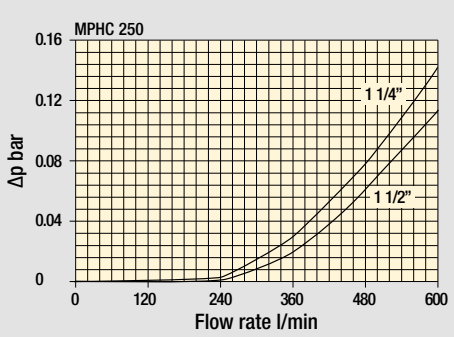

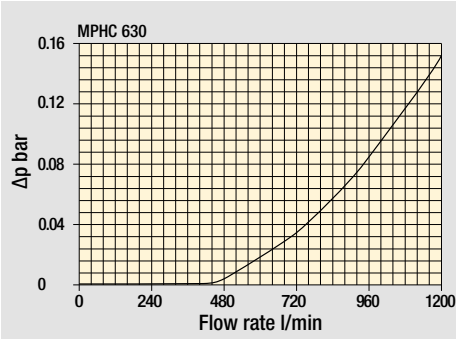

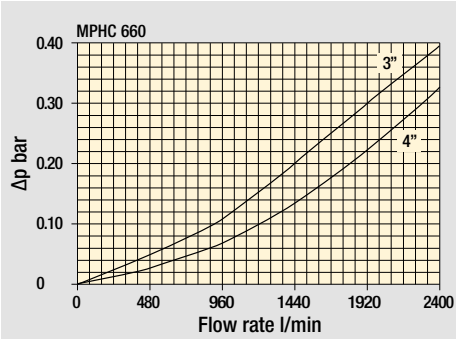

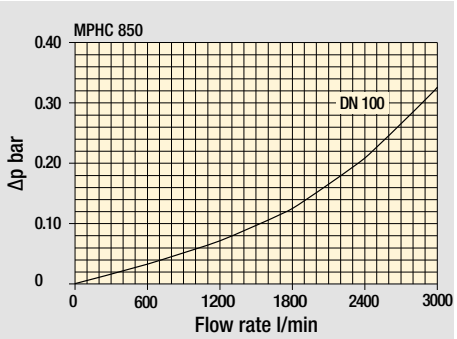

Bypass valve pressure drop

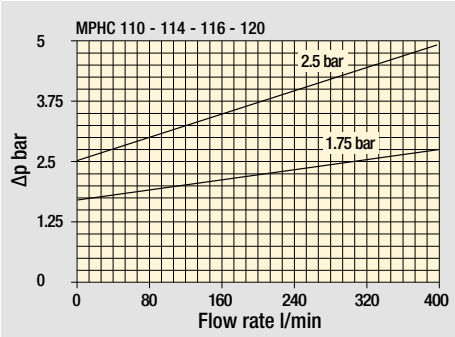

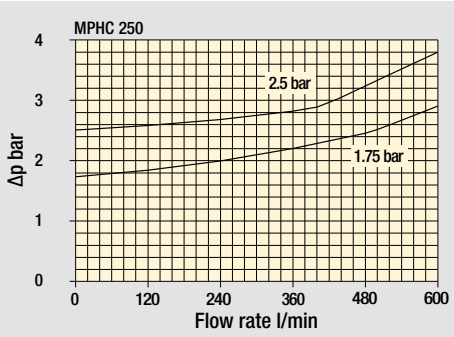

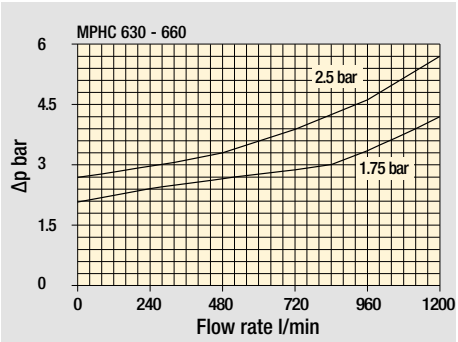

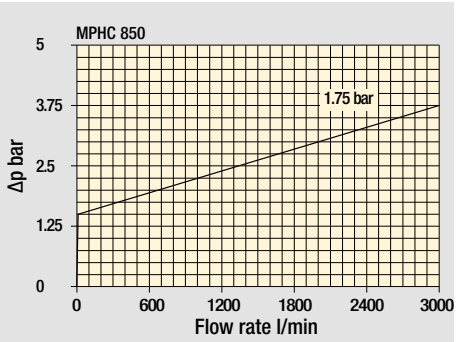

Air breather pressure drop

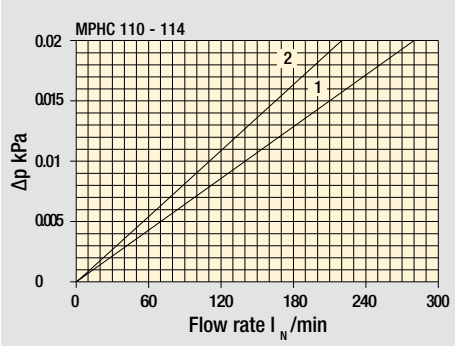

1 AS With air breather 10 µm
2 AR With anti-splash and SAP50 10 µm

The curves are plotted using mineral oil with density of 0.86 kg/dm³ in compliance with ISO 3968. Δp varies proportionally with density.

Designation & Ordering code

COMPLETE FILTER

Example: MPHC | 630 | 50 | A0025 | D | W | 17 | FE212 | 1 | 6T | DA | P01 | NN

Series
MPHC

Size
630

Length
10 | 20 | 30 | 40 | 50

Filtration rating (filter media)

A0003	Inorganic microfiber	3 µm
A0006	Inorganic microfiber	6 µm
A0010	Inorganic microfiber	10 µm
A0016	Inorganic microfiber	16 µm
A0025	Inorganic microfiber	25 µm
M0025	Wire mesh	25 µm
M0060	Wire mesh	60 µm
M0090	Wire mesh	90 µm
P0010	Resin impregnated paper	10 µm
P0025	Resin impregnated paper	25 µm

Element Δp

D	10 bar

Seals and treatments

		A0xxx	M0xxx	P0xxx
A	NBR	•	•	•
V	FPM	•	•	•
W	NBR with filter and components surface treatment	•	•	-
Z	FPM with filter and components surface treatment	•	•	-

By-pass valve

00	Without bypass
17	With bypass 1.75 bar
25	With bypass 2.5 bar

Connections

FE212	2 1/2” SAE 3000 psi/M
FF212	2 1/2” SAE 3000 psi/UNC

Additional connections

0	Without additional connections		
1	Main connection	FE212	**2” SAE 3000 psi/M**
		FF212	**2” SAE 3000 psi/UNC**

Connections for clogging indicator
6T With both side indicator connection, with metal plug

Additional features

DA	With diffuser
DE	With diffuser and magnetic filter
MA	With magnetic filter
NN	Without additional features

Execution
P01 Standard catalogue item

Certificates
NN None

CLOGGING INDICATORS

See pages 776-777

BVA	Axial pressure gauge
BVR	Radial pressure gauge
BVP	Visual pressure indicator with automatic reset
BVQ	Visual pressure indicator with manual reset
BEA	Electrical pressure indicator
BEM	Electrical pressure indicator
BLA	Electrical / visual pressure indicator

ACCESSORIES

See page 270

DPT Dipstick

FILTER ELEMENT

Example: MRC | 630 | 50 | A0025 | D | A | 00 | NN | P01 | NN

Series
MRC

Size
630

Length
10 | **20** | **30** | **40** | **50**

Filtration rating (filter media)

A0003	Inorganic microfiber	3 µm
A0006	Inorganic microfiber	6 µm
A0010	Inorganic microfiber	10 µm
A0016	Inorganic microfiber	16 µm
A0025	Inorganic microfiber	25 µm
M0025	Wire mesh	25 µm
M0060	Wire mesh	60 µm
M0090	Wire mesh	90 µm
P0010	Resin impregnated paper	10 µm
P0025	Resin impregnated paper	25 µm

Element Δp
D 10 bar

Seals and treatments
A NBR
V FPM

Bypass
00 Without bypass

Additional features
NN Without additional features

Execution
P01 Standard catalogue item

Certificates
NN None

Dimensions

MPHC630	
Additional connection “0”	
Connection	**T**
FE212	G 1/8”
FF212	1/8” NPT

Filter length	H1 [mm]	H2 [mm]	H3 [mm]
10	260	278	330
20	340	358	410
30	440	458	510
40	528	548	600
50	829	848	900

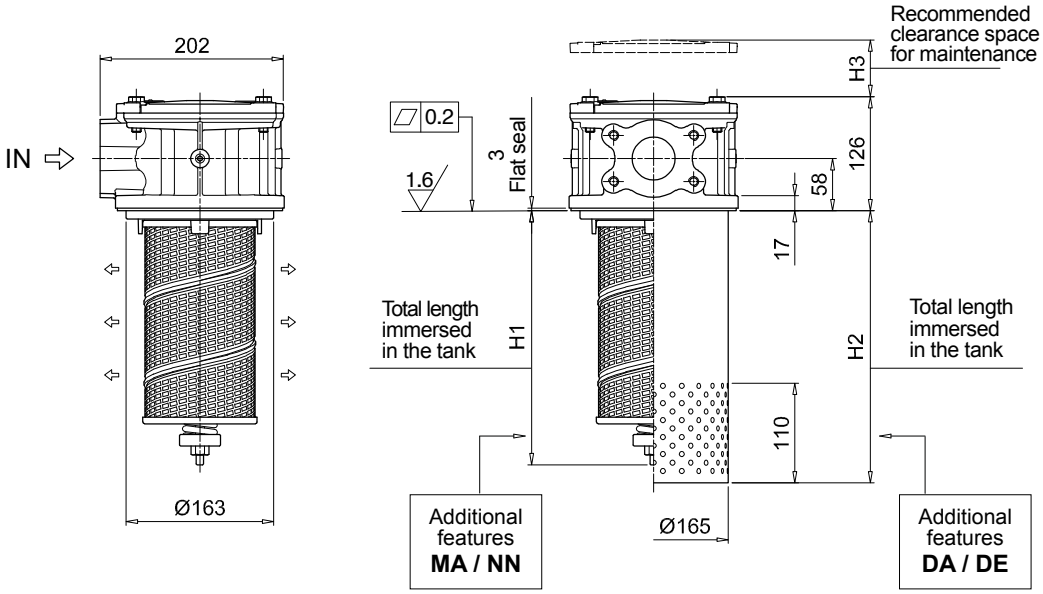

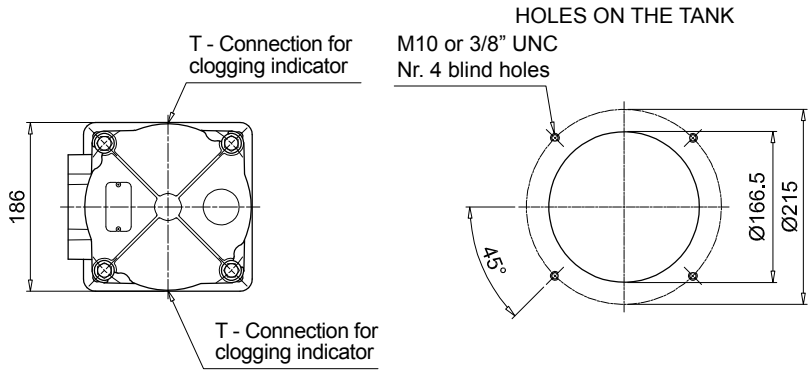

MPHC630	
Additional connection "1"	
Connection	**T**
FE212	G 1/8"
FF212	1/8" NPT

Filter length	H1 [mm]	H2 [mm]	H3 [mm]
10	260	278	330
20	340	358	410
30	440	458	510
40	528	548	600
50	829	848	900

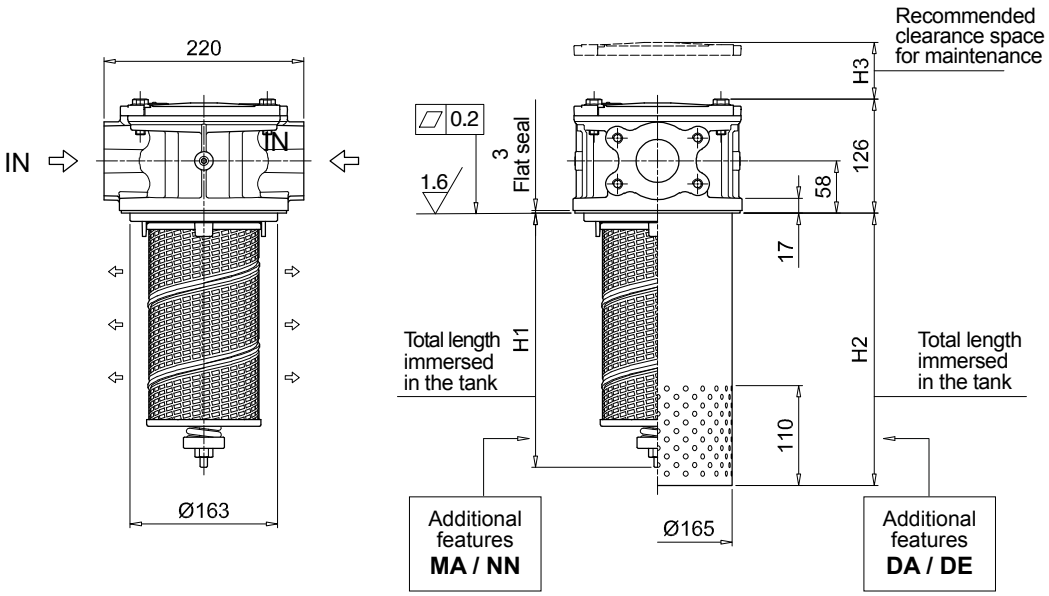

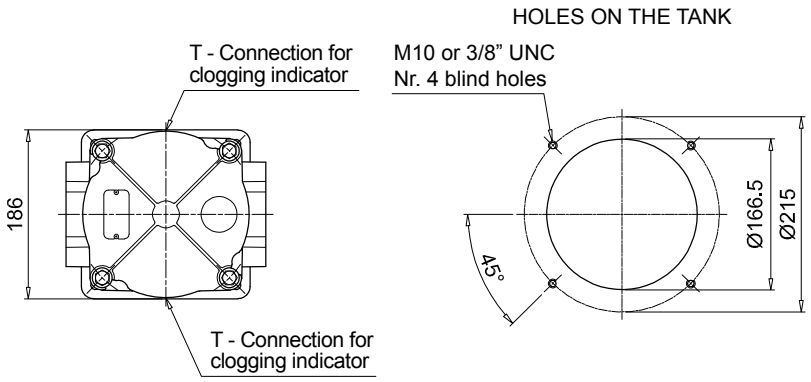

FILTER ELEMENT

Example: MRC | 630 | 40 | A0025 | D | A | 00 | NN | P01 | NN

Series
MRC

Size
630

Length
40 | **50**

Filtration rating (filter media)

A0003	Inorganic microfiber	3 µm
A0006	Inorganic microfiber	6 µm
A0010	Inorganic microfiber	10 µm
A0016	Inorganic microfiber	16 µm
A0025	Inorganic microfiber	25 µm
M0025	Wire mesh	25 µm
M0060	Wire mesh	60 µm
M0090	Wire mesh	90 µm
P0010	Resin impregnated paper	10 µm
P0025	Resin impregnated paper	25 µm

Element Δp
D 10 bar

Seals and treatments
A NBR
V FPM

Bypass
00 Without bypass

Additional features
NN Without additional features

Execution
P01 Standard catalogue item

Certificates
NN None