# MPF series

**Maximum working pressure up to 800 kPa (8 bar) - Flow rate up to 900 l/min**



# MPF GENERAL INFORMATION

## Description

Return filter

**Maximum working pressure up to 800 kPa (8 bar)**
**Flow rate up to 900 l/min**

MPF is a range of return filters for protection of the reservoir against the system contamination.
They are directly fixed to the reservoir, in immersed or semi-immersed position.
The filter output must be always immersed into the fluid to avoid aeration or foam generation into the reservoir.

### Available features:

- Female threaded connections up to 2" and flanged connections up to 2", for a maximum flow rate of 750 l/min
- Multiple connections, to connect several return lines or drains
- Fine filtration rating, to get a good cleanliness level into the reservoir
- Bypass valve integrated into the filter element, to relieve excessive pressure drop across the filter media
- 2, 3 or 4 fixing holes for installation, to suit a variety of reservoir surfaces
- O-ring or Flat Seal to suit a variety of reservoir surfaces
- Oil dipstick, to easily check the level of the fluid into the reservoir (sold as separate item)
- Extension tube, to be used in deep reservoirs (sold as separate item)
- Diffuser, to reduce the risk of aeration, foaming and noise (sold as separate item)
- Filler plug, to fill cleaned fluid into the tank without an additional connection
- Visual, electrical and electronic clogging indicators

### Common applications:

- Light industrial equipment
- Mobile application

## Technical data

### Filter housing materials

- Head: Aluminium

- Cover
  Nylon: MPF 020-030-100-104-110
  Aluminium: MPF 181-182-184-191-192-194-400-410-450-451-750

- Bowl: Nylon

### Bypass valve

- Opening pressure 175 kPa (1.75 bar) ±10%
- Opening pressure 300 kPa (3 bar) ±10%

### Δp element type

- Microfibre filter elements - series H: 10 bar
- Fluid flow through the filter element from OUT to IN

### Seals

- Standard NBR series A
- Optional FPM series V

### Temperature

From -25 °C to +110 °C

### Note

MPF filters are provided for vertical mounting



## Weights [kg] and volumes [dm³]

| Filter series | Weights [kg] | | | | | Volumes [dm³] | | | | |
|---|---|---|---|---|---|---|---|---|---|---|
| | Length | 1 | 2 | 3 | 4 | Length | 1 | 2 | 3 | 4 |
| **MPF 020** | | 0.30 | - | - | - | | 0.26 | - | - | - |
| **MPF 030** | | 0.40 | - | - | - | | 0.29 | - | - | - |
| **MPF 100** | | 0.61 | 0.64 | 0.67 | 0.74 | | 0.64 | 0.85 | 1.20 | 1.65 |
| **MPF 104** | | 0.82 | 0.96 | 1.02 | 1.25 | | 0.64 | 0.85 | 1.20 | 1.65 |
| **MPF 110** | | 0.64 | 0.68 | 0.71 | 0.78 | | - | - | - | - |
| **MPF 181** | | 2.20 | 3.00 | - | - | | 2.50 | 4.00 | - | - |
| **MPF 182** | | 2.30 | 3.10 | - | - | | 2.50 | 4.00 | - | - |
| **MPF 184** | | 2.55 | 3.45 | - | - | | 2.65 | 4.45 | - | - |
| **MPF 191** | | - | 3.00 | - | - | | - | 4.25 | - | - |
| **MPF 192** | | - | 3.10 | - | - | | - | 4.25 | - | - |
| **MPF 194** | | - | 3.45 | - | - | | - | 4.45 | - | - |
| **MPF 400** | | 3.35 | 3.65 | 3.90 | - | | 3.70 | 4.60 | 5.40 | - |
| **MPF 410** | | 3.55 | 3.85 | 4.10 | - | | 3.70 | 4.60 | 5.40 | - |
| **MPF 450-451** | | 3.95 | 4.25 | 4.50 | - | | 3.70 | 4.60 | 5.40 | - |
| **MPF 750** | | 6.30 | - | - | - | | 8.45 | - | - | - |

## FILTER ASSEMBLY SIZING
Flow rates [l/min]

| Filter series | Length | Filter element design - H series | | | | | Filter element design - N series | | |
|---|---|---|---|---|---|---|---|---|---|
| | | A03 | A06 | A10 | A16 | A25 | M25 M60 M90 | P10 | P25 |
| **MPF 020** | **1** | 7 | 10 | 23 | 28 | 42 | 59 | 51 | 54 |
| **MPF 030** | **1** | 7 | 10 | 24 | 29 | 47 | 84 | 60 | 66 |
| **MPF 100-104-110** | **1** | 18 | 20 | 53 | 56 | 65 | 153 | 87 | 96 |
| | **2** | 28 | 38 | 65 | 75 | 95 | 158 | 111 | 123 |
| | **3** | 48 | 55 | 125 | 135 | 169 | 289 | 224 | 251 |
| | **4** | 79 | 89 | 180 | 185 | 198 | 306 | 264 | 289 |
| **MPF 181-182-184** | **1** | 127 | 148 | 235 | 243 | 278 | 441 | 285 | 299 |
| | **2** | 231 | 262 | 358 | 382 | 388 | 472 | 404 | 412 |
| **MPF 191-192-194** | **2** | 261 | 305 | 489 | 528 | 546 | 696 | 583 | 598 |
| **MPF 400** | **1** | 150 | 171 | 294 | 304 | 350 | 585 | 370 | 390 |
| | **2** | 237 | 252 | 454 | 462 | 589 | 868 | 619 | 645 |
| | **3** | 248 | 288 | 553 | 609 | 621 | 885 | 680 | 703 |
| **MPF 410** | **1** | 146 | 167 | 277 | 285 | 325 | 512 | 341 | 357 |
| | **2** | 226 | 239 | 396 | 402 | 485 | 644 | 503 | 519 |
| | **3** | 236 | 269 | 462 | 497 | 505 | 653 | 539 | 553 |
| **MPF 450-451** | **1** | 150 | 171 | 294 | 304 | 350 | 585 | 370 | 390 |
| | **2** | 237 | 252 | 454 | 462 | 589 | 868 | 619 | 645 |
| | **3** | 248 | 288 | 553 | 609 | 621 | 885 | 680 | 703 |
| **MPF 750** | **1** | 392 | 465 | 623 | 700 | 769 | 929 | 804 | 819 |

**Maximum flow rate for a complete return filter with a pressure drop Δp = 0.5 bar.**
The reference fluid has a kinematic viscosity of 30 $mm^2/s$ (cSt) and a density of 0.86 $kg/dm^3$.
For different pressure drop or fluid viscosity we recommend to use our selection software available on www.mpfiltri.com.
You can also calculate the right size using the formulas present on the FILTER SIZING paragraph at the beginning of the full catalogue or at the beginning of the filter family brochure.
Please, contact our Sales Department for further additional information.

## Hydraulic symbols

| Filter series | Style 1 connection | Style 2 connections |
|---|---|---|
| **MPF 020** | • | |
| **MPF 030** | • | |
| **MPF 100** | • | |
| **MPF 104** | • | |
| **MPF 110** | | • |
| **MPF 181** | • | |
| **MPF 182** | | • |
| **MPF 184** | • | • |
| **MPF 191** | • | |
| **MPF 192** | • | |
| **MPF 194** | • | • |
| **MPF 400** | • | |
| **MPF 410** | | • |
| **MPF 450** | • | |
| **MPF 451** | | • |
| **MPF 750** | • | |

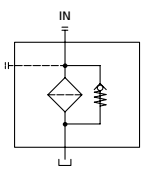


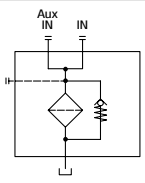

## Pressure drop

### Filter housings Δp pressure drop

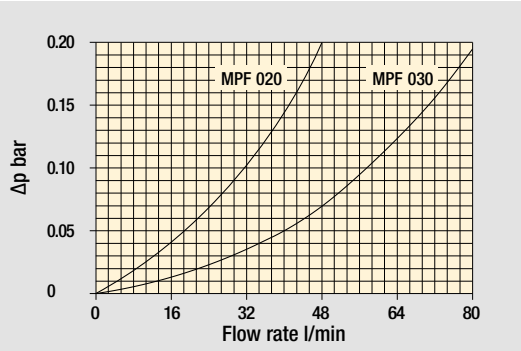


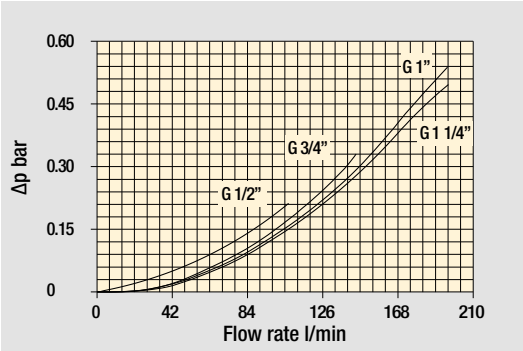


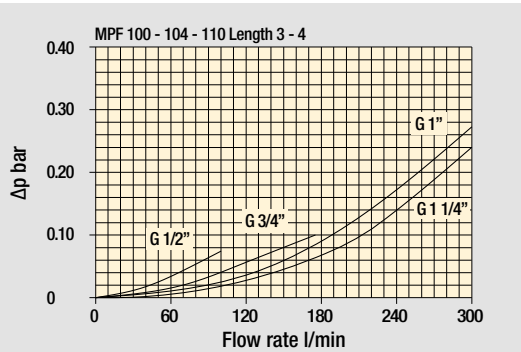


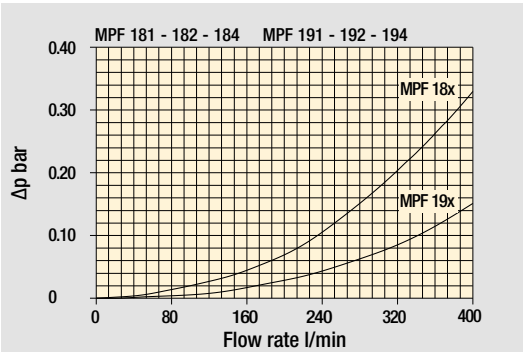


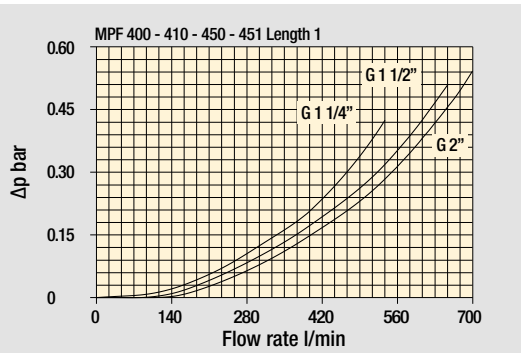


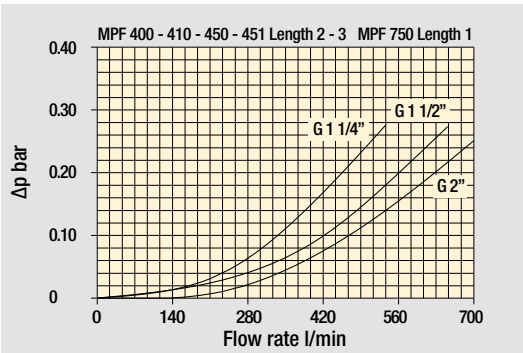


### Bypass valve pressure drop

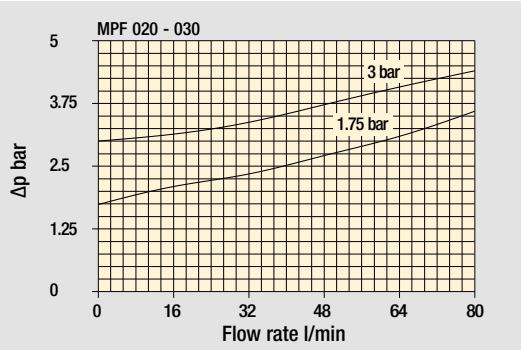


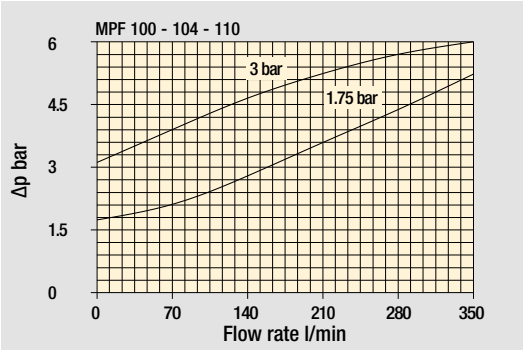


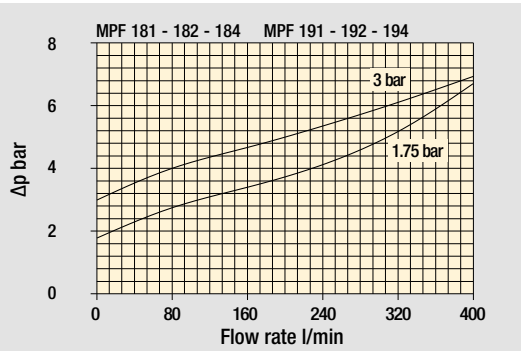


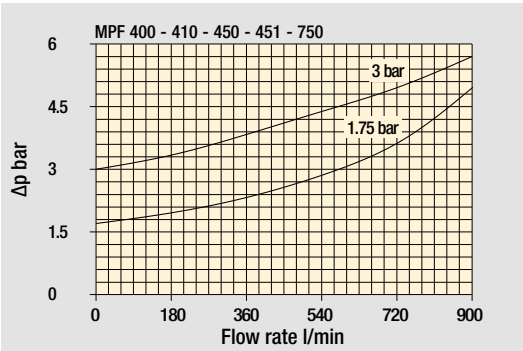


The curves are plotted using mineral oil with density of 0.86 kg/dm³ in compliance with ISO 3968. Δp varies proportionally with density.

Standard - Single IN port



Double IN port
Option: double indicator port

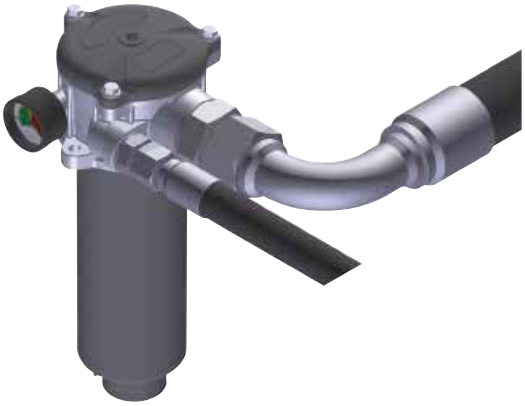

Double IN port - Drain port
Option: indicator port

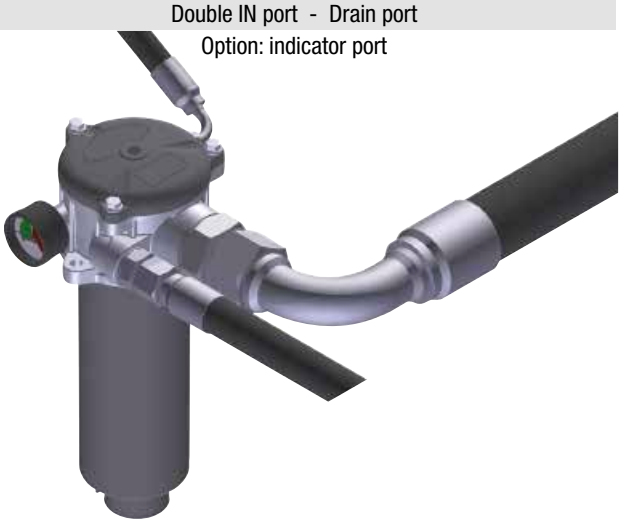

Double IN port - Double drain port

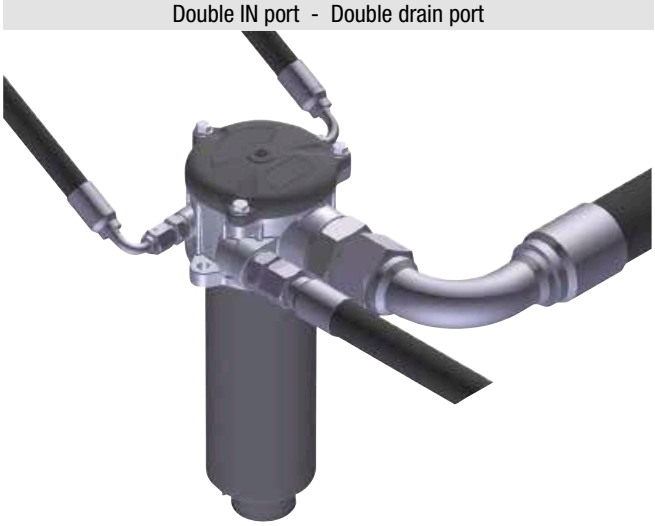

# MPF MPF450 - MPF451 - MPF750

## Designation & Ordering code

### COMPLETE FILTER

| Configuration example 1: | MPF450 | 1 | A | G1 | A25 | H | B | P01 |
|---|---|---|---|---|---|---|---|---|
| Configuration example 2: | MPF750 | 1 | V | F2 | P10 | N | E | P01 |

**Series and size**

**MPF450** | **MPF451** | **MPF750** Filter element with standard spigot

| Length | MPF 450 | MPF 451 | MPF 750 |
|---|---|---|---|
| **1** | • | • | • |
| **2** | • | • | |
| **3** | • | • | |

**Seals and treatments**

| | | | |
|---|---|---|---|
| **A** | NBR | **W** | NBR head anodized |
| **V** | FPM | **Z** | FPM head anodized |

| Connections | Aux (only size 451) |
|---|---|
| **G1** G 2” | G 3/4” |
| **G4** 2” NPT | 3/4” NPT |
| **G7** SAE 32 - 2 1/2” - 12 UN | SAE 12 - 1 1/16” - 12 UN |
| **F1** 2” SAE 3000 psi/M | G 3/4” |
| **F2** 2” SAE 3000 psi/UN | 3/4” NPT |

**Filtration rating (filter media)**

| | | | |
|---|---|---|---|
| **A03** | Inorganic microfiber 3 µm | **M25** | Wire mesh 25 µm |
| **A06** | Inorganic microfiber 6 µm | **M60** | Wire mesh 60 µm |
| **A10** | Inorganic microfiber 10 µm | **M90** | Wire mesh 90 µm |
| **A16** | Inorganic microfiber 16 µm | **P10** | Resin impregnated paper 10 µm |
| **A25** | Inorganic microfiber 25 µm | **P25** | Resin impregnated paper 25 µm |

| Element Δp | Filter media Axx | Mxx | Pxx |
|---|---|---|---|
| **N** 10 bar | | • | • |
| **H** 10 bar | • | | |
| **W** 10 bar, compatible with fluids HFA, HFB and HFC | • | • | |

| Bypass valve | |
|---|---|
| **E** | 3 bar |
| **B** | 1.75 bar |

| Execution | |
|---|---|
| **P01** | MP Filtri standard |
| **Pxx** | Customized |

### FILTER ELEMENT

| Configuration example 1: | MF400 | 1 | A25 | H | B | | P01 |
|---|---|---|---|---|---|---|---|
| Configuration example 2: | MFX750 | 1 | P10 | N | V | E | P01 |

**Element series and size**

**MF400** | **MF750** Filter element with standard spigot

| Element length | MPF 450 | MPF 451 | MPF 750 |
|---|---|---|---|
| **1** | • | • | • |
| **2** | • | • | |
| **3** | • | • | |

**Filtration rating (filter media)**

| | | | |
|---|---|---|---|
| **A03** | Inorganic microfiber 3 µm | **M25** | Wire mesh 25 µm |
| **A06** | Inorganic microfiber 6 µm | **M60** | Wire mesh 60 µm |
| **A10** | Inorganic microfiber 10 µm | **M90** | Wire mesh 90 µm |
| **A16** | Inorganic microfiber 16 µm | **P10** | Resin impregnated paper 10 µm |
| **A25** | Inorganic microfiber 25 µm | **P25** | Resin impregnated paper 25 µm |

| Element Δp | Filter media Axx | Mxx | Pxx |
|---|---|---|---|
| **N** 10 bar | | • | • |
| **H** 10 bar | • | | |
| **W** 10 bar, compatible with fluids HFA, HFB and HFC | • | • | |

| Seals | |
|---|---|
| **B** | NBR |
| **V** | FPM |

| Bypass valve | |
|---|---|
| **E** | 3 bar |
| | 1.75 bar |

| Execution | |
|---|---|
| **P01** | MP Filtri standard |
| **Pxx** | Customized |

### ACCESSORIES

| Indicators | page |
|---|---|
| **BVA** Axial pressure gauge | 240 |
| **BVR** Radial pressure gauge | 240 |
| **BVP** Visual pressure indicator with automatic reset | 241 |
| **BVQ** Visual pressure indicator with manual reset | 241 |

| | page |
|---|---|
| **BEA** Electrical pressure indicator | 239 |
| **BEM** Electrical pressure indicator | 239 |
| **BLA** Electrical / visual pressure indicator | 239-240 |

| Additional features | page |
|---|---|
| **Sxx** Extension tube | 248 |
| **T5** Filler plug M30x1.5 | 249 |

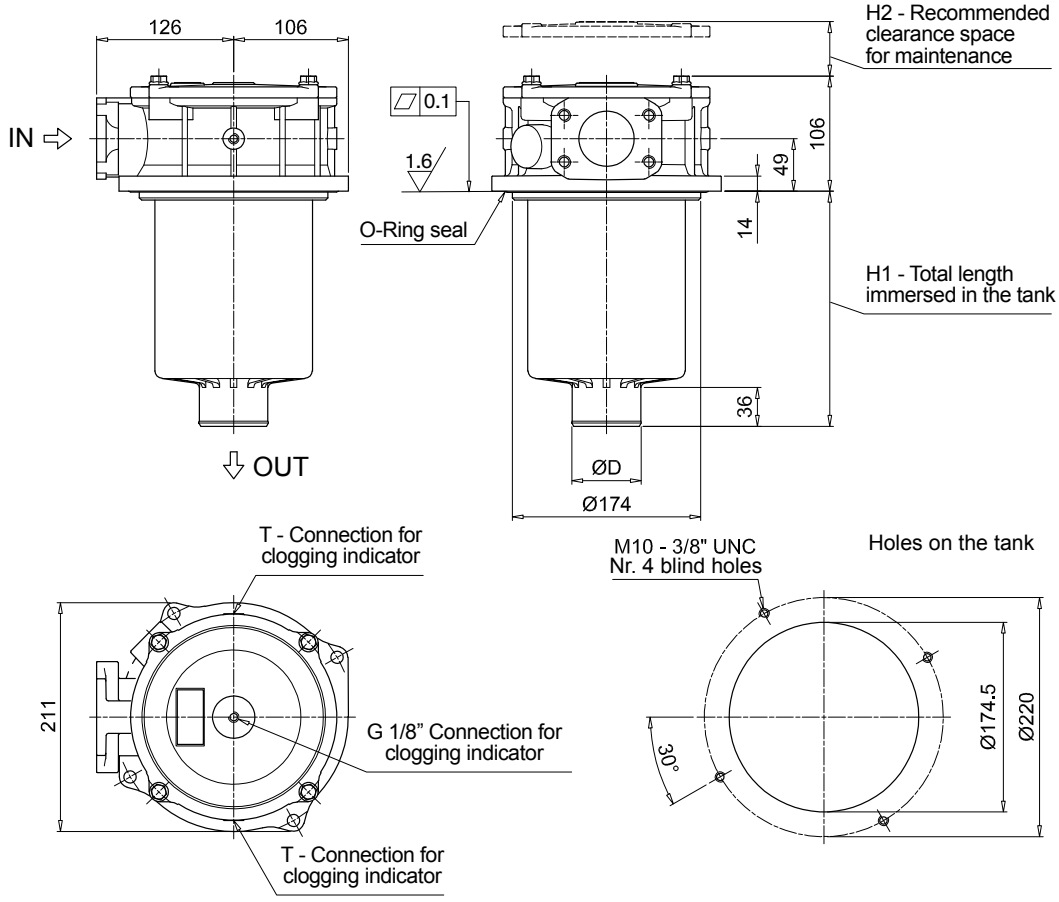


## MPF450

| Filter length | H1 [mm] | H2 [mm] | D [mm] |
|---|---|---|---|
| **1** | 180 | 210 | 51 |
| **2** | 240 | 270 | 64 |
| **3** | 290 | 315 | 64 |

| Connections | T |
|---|---|
| **G1** | G 1/8" |
| **G4 - G7** | 1/8" NPT |
| **F1** | G 1/8" |
| **F2** | 1/8" NPT |

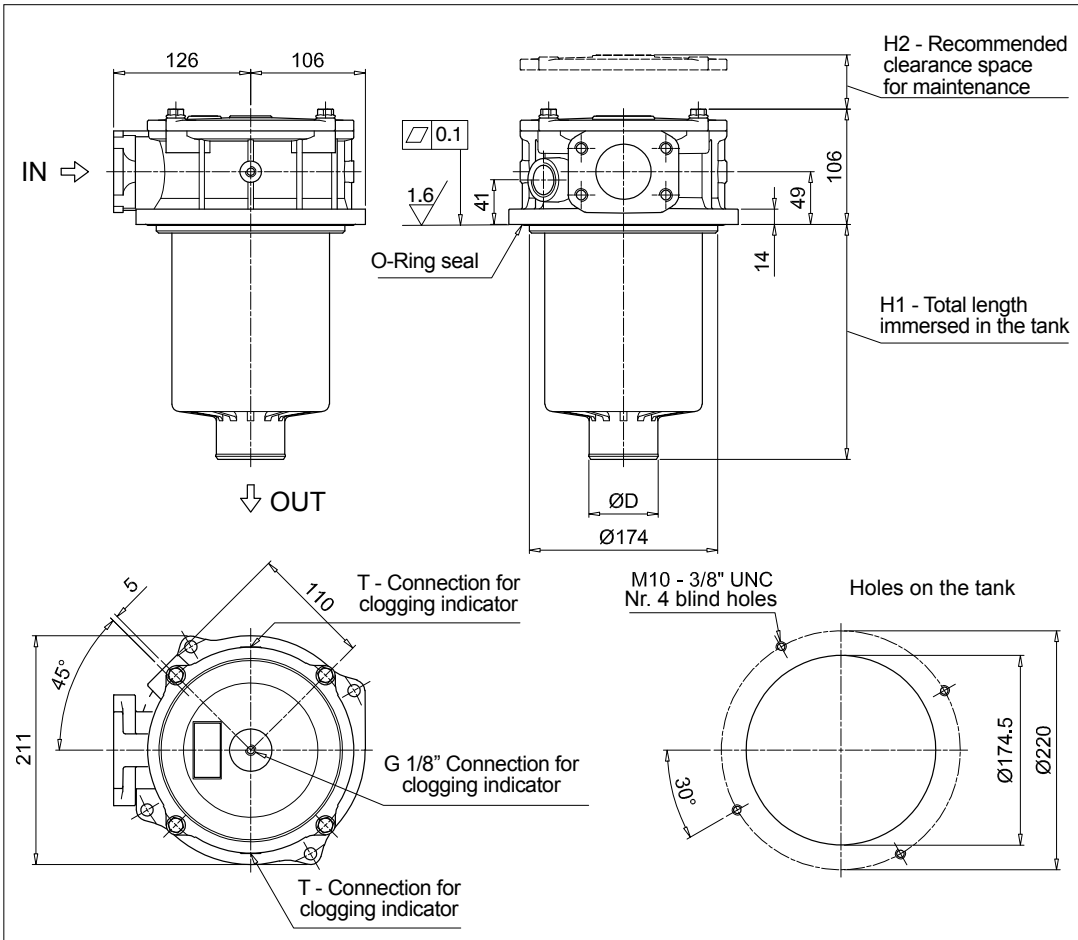


## MPF451

| Filter length | H1 [mm] | H2 [mm] | D [mm] |
|---|---|---|---|
| **1** | 180 | 210 | 51 |
| **2** | 240 | 270 | 64 |
| **3** | 290 | 315 | 64 |

| Connections | T |
|---|---|
| **G1** | G 1/8" |
| **G4 - G7** | 1/8" NPT |
| **F1** | G 1/8" |
| **F2** | 1/8" NPT |

## Dimensions

MPF750

