FHB series

Maximum working pressure up to 32 MPa (320 bar) - Flow rate up to 485 l/min



INSTALLATION, SERVICE AND MAINTENANCE MANUAL AND SAFETY INSTRUCTIONS

Please scan or click the QR codes to get updated electronic version of the related document:

FHB050 FHB065 FHB135 FHB320

For all the QR codes: Scan or click me!

FHB GENERAL INFORMATION

Description

High Pressure filters

Manifold
Maximum working pressure up to 32 MPa (320 bar)
Flow rate up to 485 l/min

FHB is a range of high pressure filter for protection of sensitive components in high pressure hydraulic systems in the mobile machines. They are directly connected to the side of the manifold, through the proper flanged interface.

Available features:

- Manifold connections up to Ø30 mm, for a maximum flow rate of 485 l/min
- Fine filtration rating, to get a good cleanliness level into the system
- Bypass valve, to relieve excessive pressure drop across the filter media
- Check valve, to protect the system against reverse flow
- Low collapse filter element "N", for use with filters provided with bypass valve
- High collapse filter element "H", for use with filters not provided with bypass valve
- High collapse filter element with external support "S", for filter element protection against the back pressure caused by the check valve in filters not provided with the bypass valve
- Visual, electrical and electronic differential clogging indicators

Common applications:

Delivery lines, in any high pressure industrial equipment or mobile machines

Technical data

Filter housing materials

- Head: Phosphatized cast iron
- Housing: Phosphatized steel
- Bypass valve: Steel
- Check valve: Steel

Pressure

- Test pressure: 48 MPa (480 bar)
- Min. Burst pressure: 96 MPa (960 bar)
- Pulse pressure fatigue test: 1 000 000 cycles with pressure from 0 to 32 MPa (320 bar)

Bypass valve

- Opening pressure 0.6 MPa (6 bar) ±10%
- Other opening pressures on request.

Filter element features

Filter		Filter element	
FHB		HP	
Δp Element type			
Element media	**Construction**	**Δp Series**	**Δp**
A - Microfiber	Standard	N	20 bar
	High Δp	H	210 bar
	High Δp with external support	S	210 bar
M - Wire mesh	Standard	N	20 bar
Please see ordering code tables to check element Δp series availability based on filter features.			
Flow direction through the filter element: From OUT to IN			

Seals

- Standard NBR series A
- Optional FPM series V

Temperature

From -25 °C to +110 °C

Connections

Manifold mounting

Note

FHB filters are provided for vertical mounting

Weights [kg] and volumes [dm³]

Filter series	Weights [kg]						Volumes [dm³]					
	Length	1	2	3	4	5	Length	1	2	3	4	5
FHB 050		2.61	2.98	3.39	3.86	5.04		0.21	0.30	0.40	0.52	0.81
FHB 065		3.33	3.69	4.90	-	-		0.20	0.27	0.49	-	-
FHB 135		6.61	8.21	9.21	-	-		0.40	0.73	0.94	-	-
FHB 320		12.95	15.08	17.37	26.77	-		0.91	1.63	2.40	3.59	-

Flow rates [l/min]

		Filter element design - N Series						Filter element design - S Series				
Filter series	Length	A03	A06	A10	A16	A25	M25	A03	A06	A10	A16	A25
FHB 050	1	43	42	79	81	101	131	30	40	58	60	74
	2	53	58	84	93	112	132	46	50	76	86	108
	3	67	70	94	101	119	133	59	62	87	95	115
	4	82	87	106	108	122	134	74	80	101	103	119
	5	102	104	119	122	127	136	90	92	105	113	126

		Filter element design - N Series						Filter element design - H Series				
Filter series	Length	A03	A06	A10	A16	A25	M25	A03	A06	A10	A16	A25
FHB 065	1	25	33	55	62	87	133	23	25	49	58	81
	2	33	51	70	76	101	134	33	38	66	75	94
	3	60	71	97	103	118	138	60	68	95	102	116
FHB 135	1	67	72	120	129	177	212	49	55	97	100	160
	2	109	116	152	154	224	250	90	110	137	140	182
	3	153	155	201	205	226	253	126	142	175	187	207
FHB 320	1	130	143	238	286	343	442	110	117	192	201	304
	2	259	281	391	409	454	468	200	230	319	325	392
	3	332	368	441	455	463	476	269	312	381	389	432
	4	368	390	446	462	481	488	311	334	388	394	437

Maximum flow rate for a complete pressure filter with a pressure drop Δp = 1.5 bar.

The reference fluid has a kinematic viscosity of 30 mm^2/s (cSt) and a density of 0.86 kg/dm^3.

For different pressure drop or fluid viscosity we recommend to use our selection software available on www.mpfiltri.com.

You can also calculate the right size using the formulas present on the FILTER SIZING paragraph at the beginning of the full catalogue or at the beginning of the filter family brochure.

Please, contact our Sales Department for further additional information.

Hydraulic diagram

Filter series	Style S	Style B	Style T	Style D
FHB 050	•	•	•	•
FHB 065	•	•	•	•
FHB 135	•	•	•	•
FHB 320	•	•	•	•

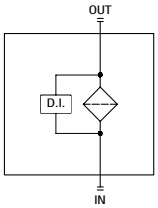

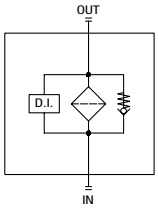

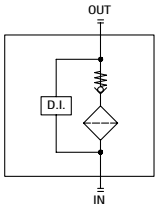

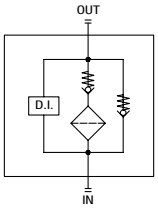

Pressure drop

Filter housings Δp pressure drop

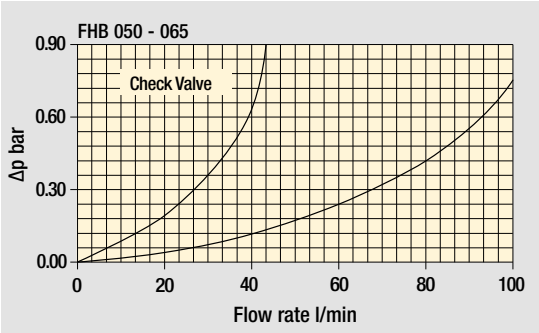

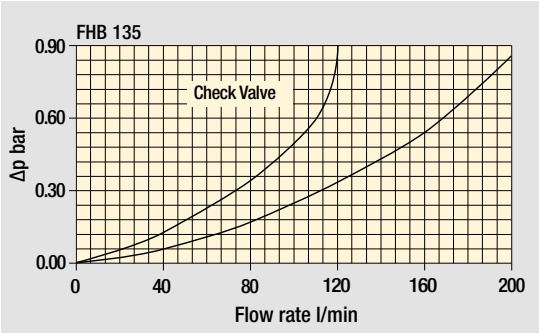

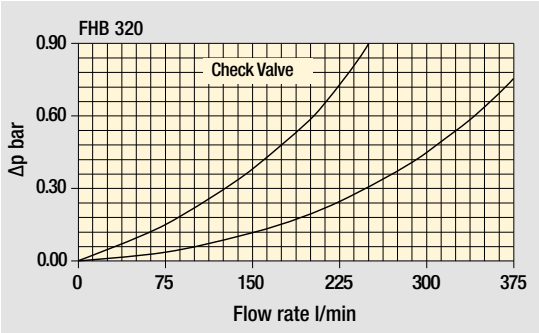

Bypass valve pressure drop

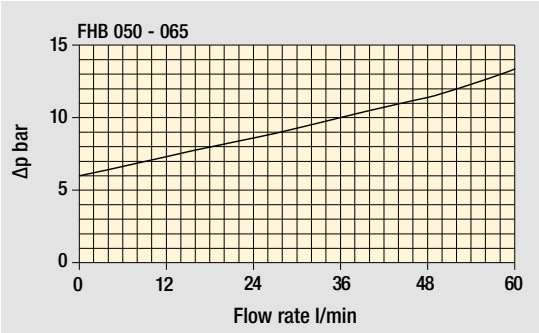

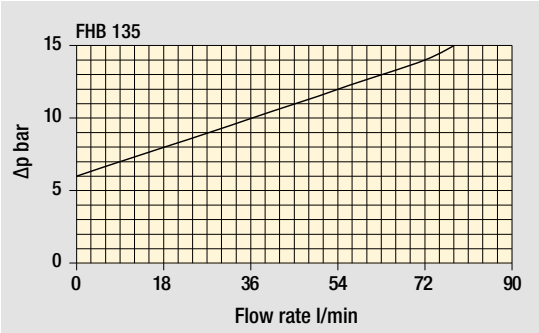

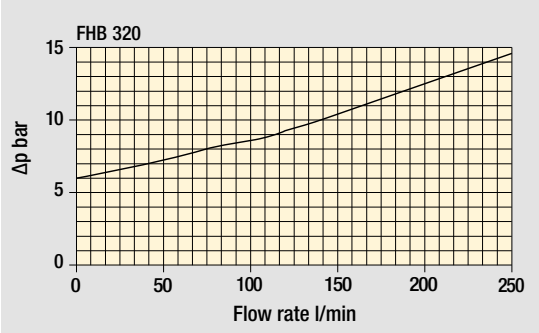

The curves are plotted using mineral oil with density of 0.86 kg/dm^3 in compliance with ISO 3968. Δp varies proportionally with density.

Designation & Ordering code

COMPLETE FILTER

Configuration example: FHB320 | 4 | S | A | F1 | A06 | H | P01

Series and size

FHB050 | **FHB065** | **FHB135** | **FHB320**

Length	FHB050	FHB065	FHB135	FHB320
1	•	•	•	•
2	•	•	•	•
3	•	•	•	•
4	•	-	-	•
5	•	-	-	-

Valves

S	Without bypass
B	With bypass 6 bar
T	With check valve, without bypass
D	With check valve, with bypass 6 bar

Seals

A	NBR
V	FPM

Connections

F1	Manifold

Filtration rating (filter media)

A03	Inorganic microfiber	3 µm
A06	Inorganic microfiber	6 µm
A10	Inorganic microfiber	10 µm
A16	Inorganic microfiber	16 µm
A25	Inorganic microfiber	25 µm
M25	Wire mesh	25 µm

Element Δp	Valves S	B	T	D
N 20 bar	-	•	-	•
S 210 bar (only for size 050)	•	-	•	-
H 210 bar (for sizes 065-135-320)	•	-	•	-

Execution	Filter size 050	065	135	320 1-2-3	320 4
P01 MP Filtri standard	•	•	•	•	•
P02 Maintenance from the bottom of the housing	-	-	-	-	•
Pxx Customized	•	•	•	•	•

FILTER ELEMENT

Configuration example: HP320 | 4 | A06 | A | H | P01

Element series and size

HP050 | **HP065** | **HP135** | **HP320**

Element length	FHB050	FHB065	FHB135	FHB320
1	•	•	•	•
2	•	•	•	•
3	•	•	•	•
4	•	-	-	•
5	•	-	-	-

Filtration rating (filter media)

A03	Inorganic microfiber	3 µm
A06	Inorganic microfiber	6 µm
A10	Inorganic microfiber	10 µm
A16	Inorganic microfiber	16 µm
A25	Inorganic microfiber	25 µm
M25	Wire mesh	25 µm

Seals	
A	NBR
V	FPM

Element Δp	Filter size 050	065	135	320
N 20 bar	•	•	•	•
S 210 bar (only for size 050)	•	-	-	-
H 210 bar (for sizes 065-135-320)	-	•	•	•

Execution	
P01	MP Filtri standard
Pxx	Customized

CLOGGING INDICATORS

See page 786

DEA	Electrical differential pressure indicator
DEM	Electrical differential pressure indicator
DEU	Electrical differential pressure indicator
DLA	Electrical / visual differential pressure indicator
DLE	Electrical / visual differential pressure indicator
DTA	Electronic differential pressure indicator
DTI	I-O Link electronic differential pressure indicator
DVA	Visual differential pressure indicator
DVM	Visual differential pressure indicator

PLUGS

See page 807

T2	Plug (not included)

Dimensions

FHB050	
Filter length	**H [mm]**
1	187
2	224
3	266
4	314
5	436

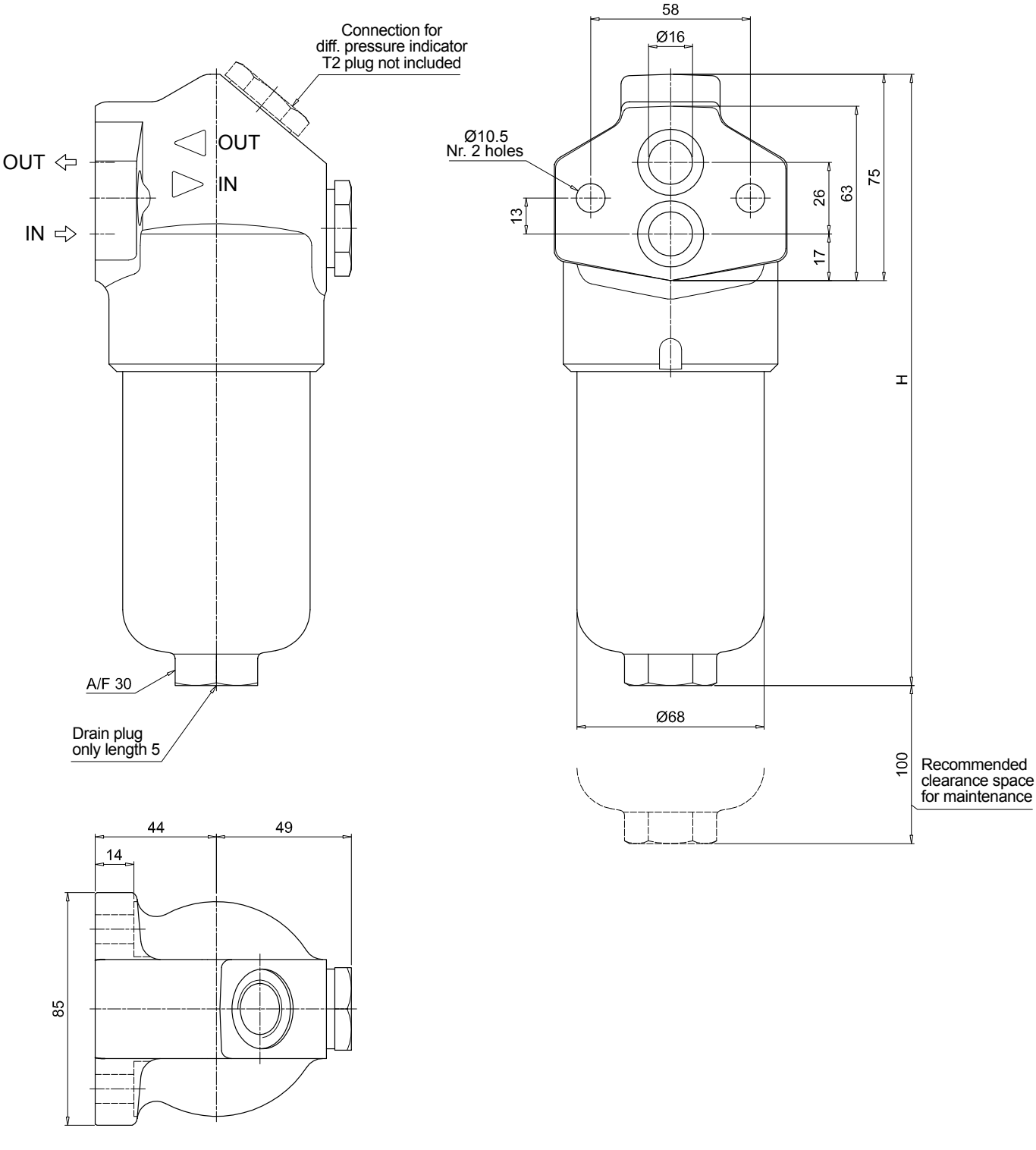

FHB 050 - 065 - 135 - 320

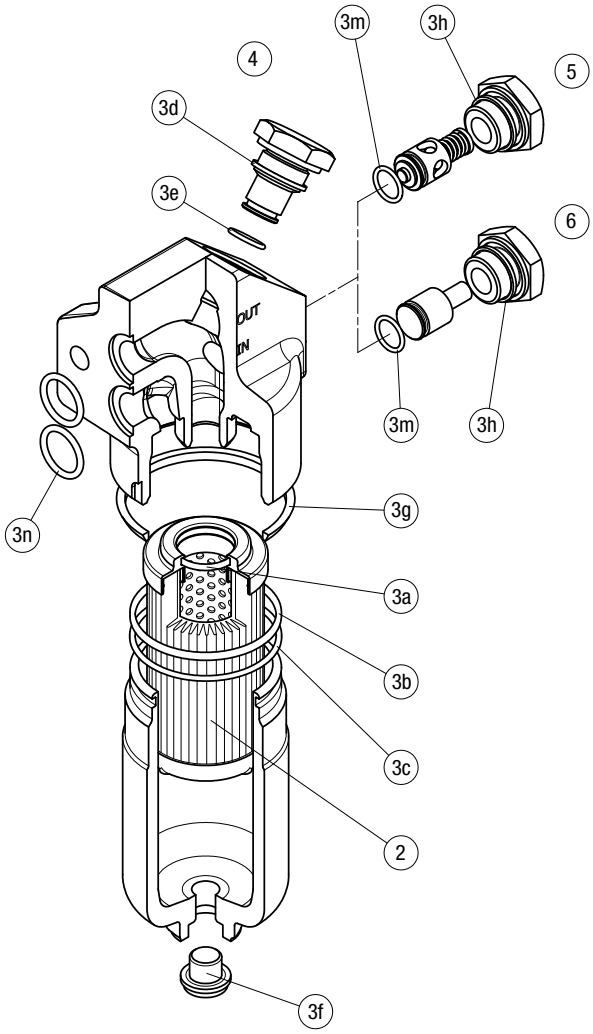

Item:	Q.ty: 1 pc. (2)	Q.ty: 1 pc. (3) (3a ÷ 3n)		Q.ty: 1 pc. (4)		Q.ty: 1 pc. (5)		Q.ty: 1 pc. (6)	
Filter series	**Filter element**	**Seal Kit code number NBR**	**FPM**	**Indicator connection plug NBR**	**FPM**	**Bypass assembly NBR**	**FPM**	**Non-bypass assembly NBR**	**FPM**
FHB 050	See order table	02050412	02050413	T2H	T2V	02001312	02001385	02001314	02001386
FHB 065		02050266	02050277			02001312	02001385	02001314	02001386
FHB 135		02050270	02050281			02001312	02001385	02001314	02001386
FHB 320		02050273	02050284			02001381	02001382	02001383	02001384