Accessories for HSC and HSIF

Accessories for HSC end section and HSIF interface

Code		Description	Symbol / Field	Draw
BSPP	UN - UNF			
HESC004103010		**HESC** Internal drain plug for HSC module, for mechanical or hydraulic controls	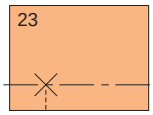	
CSRV004101203 1/4" BSPP	**CSRV004101204** 7/16"-20UNF-2B	**CSRV** External drain cartridge for HSC module, for electrical activations (to be connected to drain line)	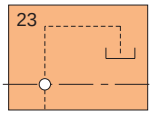	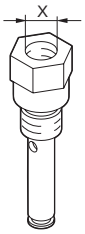

Technical data

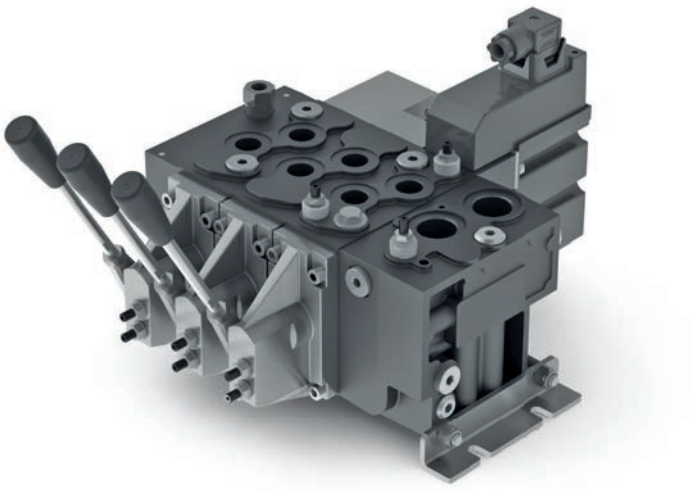

General features

The HPV proportional valves are proportional directional valves with two functional characteristics:

- Directional regulation.
- Flow regulation insensitive to the variation of the load applied to the actuator.

They can be remotely controlled and represent the most advanced technology in the world of applied hydraulics.

Proportional distributors differ in “open center” and “closed center”:

- Proportional open center distributors are used with fixed displacement pumps.
- The closed center proportional valves are used with variable displacement pumps with load sensing control.

Hydraulic features

The hydraulic features reported below were measured using a mineral based hydraulic oil according to DIN 51524 or ISO 6743/4 with a viscosity of 25 mm²/s [130 SUS] at a temperature of 50 °C [122 °F]

Rated flow	HSE inlet section, P port		160 l/min	42 US gpm
	Mid inlet section, HFLS		250 l/min	66 US gpm
	A, B ports with pressure compensator		130 l/min	34 US gpm
	A, B ports without pressure compensator		140 l/min	37 US gpm
Max. working pressure	Connection P / P port	Pressure relief valve setting	400 bar	5800 psi
		Working pressure	370 bar	5370 psi
	Ports A, B		370 bar	5370 psi
	Connection Y		to tank	
	Connection T	Static	25 bar	363 psi
		Dynamic	35 bar	508 psi
Max. pilot pressure oil supply			18 ÷ 22 bar	260 ÷ 320 psi
Oil temperature	Recommended		-30 ÷ 60 °C	-22 ÷ +140 °F
	Min.		-25 °C	-13 °F
	Max.		+80 °C	+176 °F
Ambient temperature			-30 ÷ 60 °C	-22 ÷ +140 °F
Viscosiy	Recommended		12 ÷ 80 mm²/s (cSt)	
	Min.		4 mm²/s (cSt)	
	Max.		460 mm²/s (cSt)	
Filtering	Max. contamination: class 9 according to NAS 1638 (20/18/15 according to ISO 4406)			
Stroke	Spool stroke		± 7 mm	± 0.276 in
	Proportional		± 5.5 mm	± 0.217 in
Dead band			± 1.5 mm	± 0.059 in
Nominal internal leakage at 180 bar (2611 psi)	A, B → T	Without anti-shock valves	23 cm³/min	1.40 in³/min
		With anti-shock valves	29 cm³/min	1.77 in³/min

HPV 41 internal (easy replacement) filters, mesh 100 µm.
Mineral oil hydraulic fluid: according to DIN 51524 and 51525 or ISO 6743/4. HPV 41 can also be used with phosphorous esters (HFDR), water-glycol /HFC) or water-oil (HFB) mixes, subject to our Technical Dept. approval.

Hydraulic control - MHPH module			
Pilot pressure	Start	4.5 bar	65 psi
	End stroke	15 bar	218 psi
Max. pilot pressure		30 bar	436 psi

Technical data

Characteristic curves

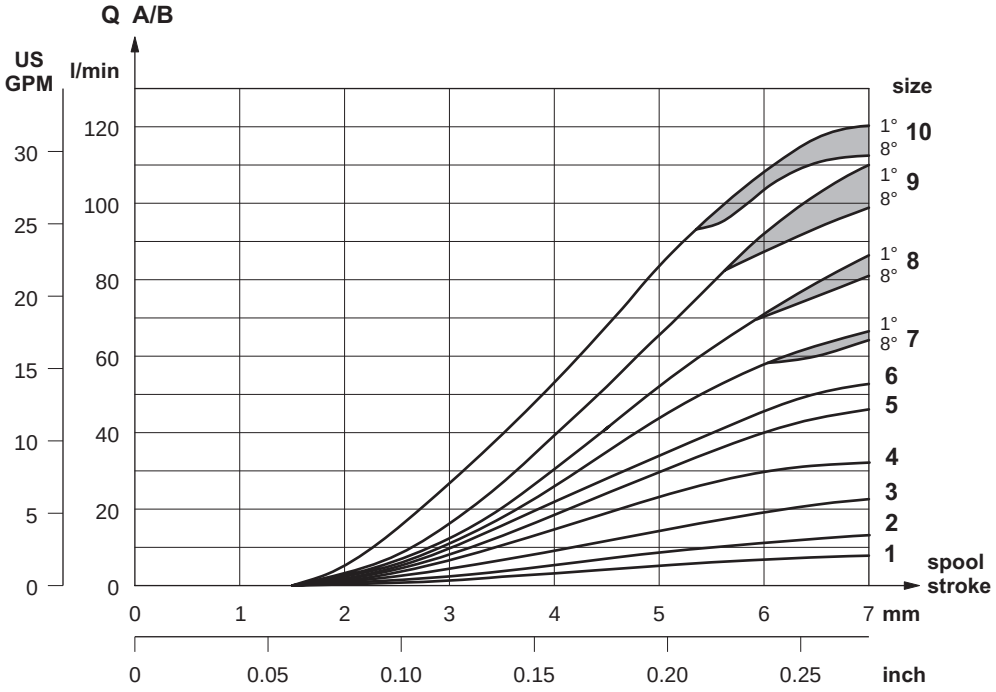

Flow characteristics of section with compensator from 1st to 8th section with open or closed centre type inlet section

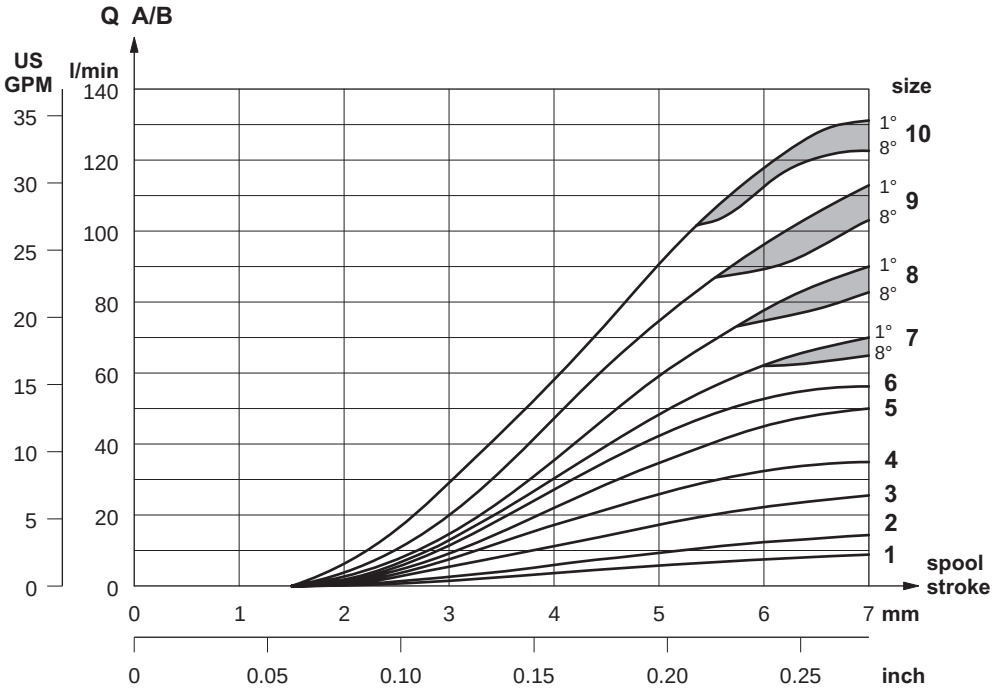

Flow characteristics of section without compensator from 1st to 8th section with open centre type inlet section

Curves measured with oil viscosity of 25 mm²/s (cSt) at a temperature of 50 °C [122 °F]