ATEX COOLERS

data sheet

ASATT25RH11BPEX













Oil / Air Cooler
TT 25 rail ATEX
hydraulic drive 11 cm³ with internal bypass

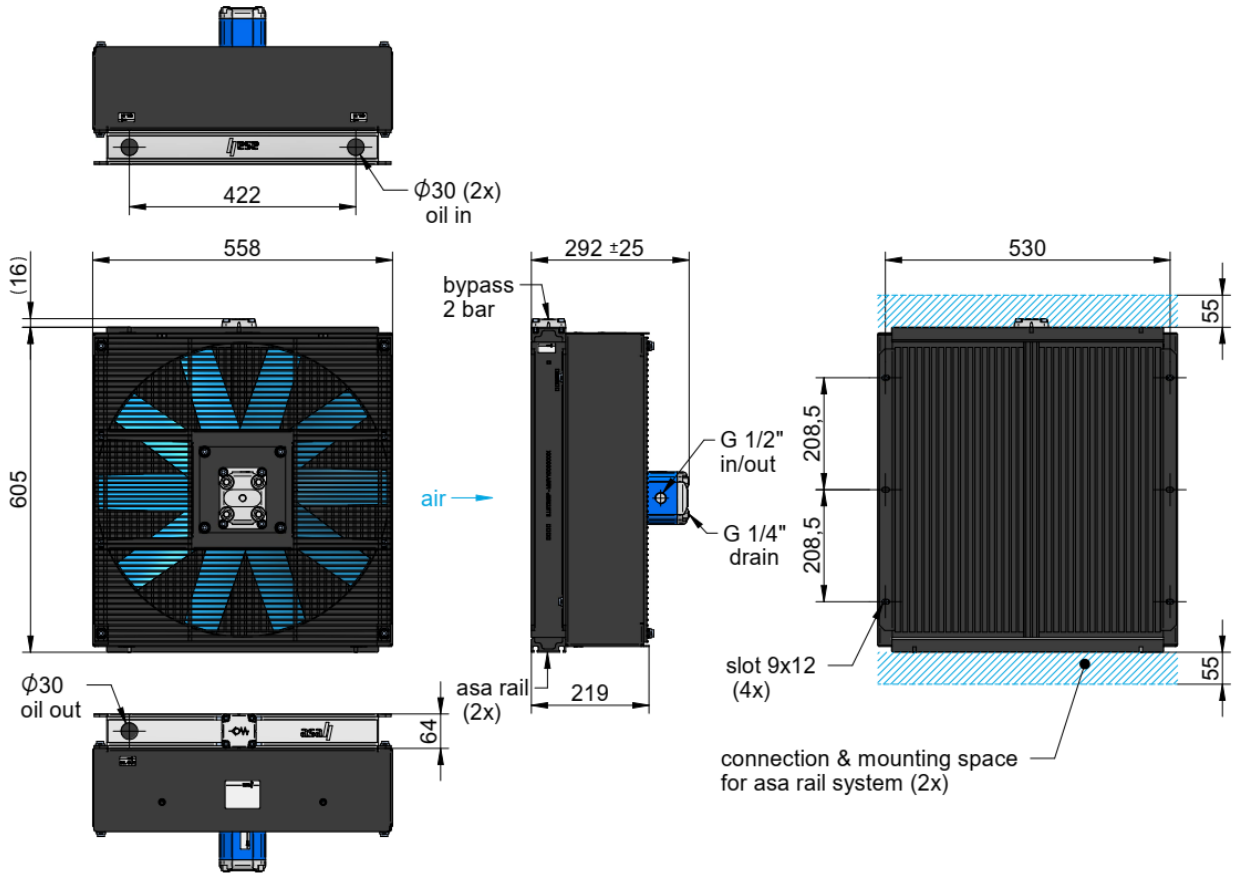

Technical Data

order number	description	motor power	oil pressure	oil flow	rotation	air flow	noise level	weight
		[kW]	[bar]	[lpm]	[rpm]	[kg/s]	[dB(A)]	[kg]
ASATT25RH11BPEX	TT 25 rail 11cm³ hydro BP atex	0,14	8	11,6	1000	1,25	70	32,5
		0,46	18	17,4	1500	1,91	79	
		1,19	34	23	2000	2,81	90	

specific cooling performance

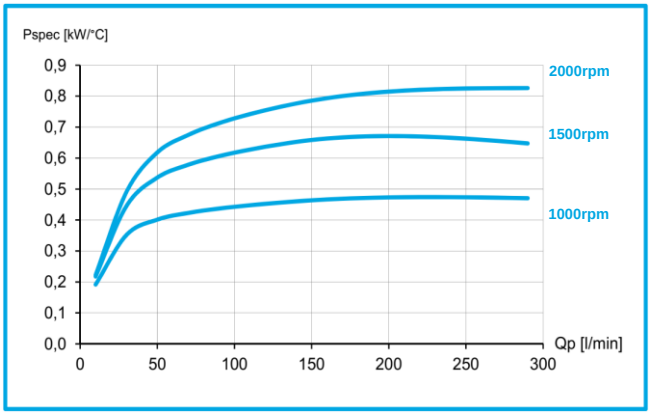

pressure drop at 30cst

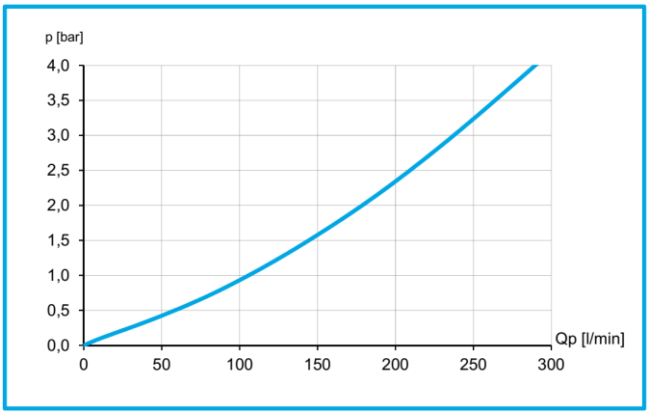

This data sheet and the corresponding scale drawings are to be used as a general guideline and technical overview of our products. Please contact us if more exact information is needed. As we are constantly improving our products, their characteristics, dimensions and weights may also change, although we do our best to incorporate these changes continually. asa assumes no liability for any information therein, any errors, omissions, misprints, nor any direct or indirect damages, losses or costs resulting therefrom. Any cooling performances and general technical values indicated in this catalogue are measured at a test bench according to asa testing procedures or calculated, based on such tests. They represent a basis for your product selection. Due to different conditions in testing and application environments the performance may also vary by +/- 15%. All sound values are determined in accordance with ISO 9614-2, DIN EN ISO 11203 accuracy class 3 or Machinery Directive 2006/42/EG and are A-rated. At some of the performance data, possible differences to competition data are possible. The reason to that are no existing standardized testing procedures on individual subjects, e.g. for cooling performance measurements. Therefore, we recommend all products to be checked under the system operating conditions. This is also true of vibrations and mechanical stress as well as for pressure peaks and thermal stress and any other relevant factors. General tolerances according to DIN ISO 2768-vL, General tolerances for casted parts according EN ISO 8062-3 (DCTG 10). Tolerances for rubber parts are according to ISO 3302-1 (class M4-F+C). The tolerances of welding seams are defined by quality group D according to EN ISO 10042, if it is not specified on the actual scale drawing or data sheet. Any form of liability is excluded for the information included in this datasheet. All details and calculation values are checked to the best of our ability, but these do not ensure any intrinsic product properties: due to the wide-ranging possible applications, it is advised that all technical data herewith included be confirmed through testing carried out by the end-user. asa technology Produktions- und Vertriebs GmbH reserves the right to modify the product without any separate notification. This refers to both technical data and the product itself. Furthermore, it is herewith specified that the datasheet does not substitute the corresponding scale drawings, assembly and installation guidelines, nor the operating instructions.

© asa technology, June 2023

Oil / Air Cooler
Special Range TT 25 rail ATEX
hydraulic drive 11cm³ with internal bypass

Radiator

material:	aluminium
working temperature range:	-20°C to +80°C (oil temperature)
air fin shape:	wavy
working pressure:	26 bar (static)

Options

temperature switches	ILLZTH5069K, ILLZTH6069K, ILLZTH9069K
rail mounting bracket	MW3046K
foot mounting options	ILLEFUSSTTK, ILLEFUSSTTHDK
internal bypass	alternative bypass settings (1bar / 5bar)

Installation System

connection BSP 1"	ILLZSET5G25 (1 set per cooler required)
connection BSP 1 ¼"	ILLZSET5G32 (1 set per cooler required)

Production according to:

ATEX standard	CE Ex II 2G c IIB T4

Name plate example:

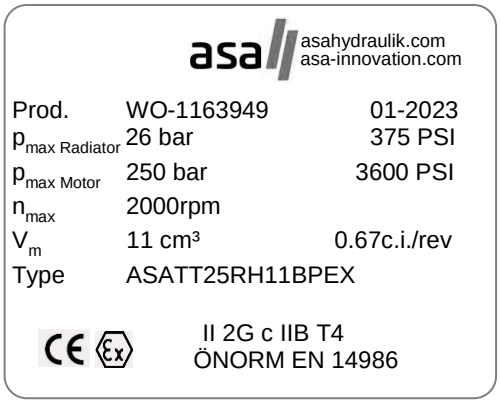



Please contact us for further information at support@asahydraulik.com or online www.asahydraulik.com

Please read manual before installation!

This data sheet and the corresponding scale drawings are to be used as a general guideline and technical overview of our products. Please contact us if more exact information is needed. As we are constantly improving our products, their characteristics, dimensions and weights may also change, although we do our best to incorporate these changes continually. asa assumes no liability for any information therein, any errors, omissions, misprints, nor any direct or indirect damages, losses or costs resulting therefrom. Any cooling performances and general technical values indicated in this catalogue are measured at a test bench according to asa testing procedures or calculated, based on such tests. They represent a basis for your product selection. Due to different conditions in testing and application environments the performance may also vary by +/- 15%. All sound values are determined in accordance with ISO 9614-2, DIN EN ISO 11203 accuracy class 3 or Machinery Directive 2006/42/EG and are A-rated. At some of the performance data, possible differences to competition data are possible. The reason to that are no existing standardized testing procedures on individual subjects, e.g. for cooling performance measurements. Therefore, we recommend all products to be checked under the system operating conditions. This is also true of vibrations and mechanical stress as well as for pressure peaks and thermal stress and any other relevant factors. General tolerances according to DIN ISO 2768-vL, General tolerances for casted parts according EN ISO 8062-3 (DCTG 10). Tolerances for rubber parts are according to ISO 3302-1 (class M4-F+C). The tolerances of welding seams are defined by quality group D according to EN ISO 10042, if it is not specified on the actual scale drawing or data sheet. Any form of liability is excluded for the information included in this datasheet. All details and calculation values are checked to the best of our ability, but these do not ensure any intrinsic product properties: due to the wide-ranging possible applications, it is advised that all technical data herewith included be confirmed through testing carried out by the end-user. asa technology Produktions- und Vertriebs GmbH reserves the right to modify the product without any separate notification. This refers to both technical data and the product itself. Furthermore, it is herewith specified that the datasheet does not substitute the corresponding scale drawings, assembly and installation guidelines, nor the operating instructions.

Thermal Systems
Connection Technology
Fluid Controls

be different.
make a difference.



AUSTRIA
asa technology Produktions-
und Vertriebs GmbH
Prager Strasse 280
A-1210, Vienna
Tel.: +43 1 292 40 20
support@asahydraulik.com

AUSTRALIA
asa Products Pty Ltd
Quinlan Road 23
3076 Epping, Victoria
Tel.: +61 3 9397 6129
melbourne@asahydraulik.com

Brasil
asa hydraulika do Brasil Ltda
Rua Maria Fett 96
03263-000 Vil Mercedes, Sao Paulo
Tel.: +55 11 9 8862-0022
sales_brazil@asayhdraulik.com

CHINA
asa Hydraulik Technology (Suzhou) Co.Ltd
江苏省苏州市工业园区方洲路128号6区B幢
Area 6, Building B,
Fangzhou Road No 128,
Suzhou industrial park,
Suzhou City, Jiangsu Province
Tel.: +86 512 62381988
suzhou@asahydraulik.com

INDIA
asa heatexchanger Pvt Ltd
Plot no.1226, Phase-3, GIDC, Vatva
Ahmedabad - 382445
Tel.: +91 70 43907273
salesindia@asahydraulik.com

USA
asa hydraulik of America
160 Meister Avenue 20 A
Branchburg, New Jersey 08876
Tel.: +1 800 473 94 00
Tel.: +1 908 541 15 00
sales_us@asahydraulik.com