

TXVA series

variable displacement piston pumps
SAE version

► Characteristics

Pump ref.	Direc-tion of rotation	Max. displacement(1)		Maximum operating pressure		Max. peak pressure (intermittent: 5%)		Torque at 300 bar (4350 psi)(2)		Max. speed at full displace-ment(3)	Max. speed in stand-by	Weight		Overhang torque(4)	
		cu.in/rev	(cc/rev)	psi	(bar)	psi	(bar)	lbf ft	(N.m)	rpm	rpm	lbs	(kg)	lbf ft	(N.m)
TXVA 75	CC CCW	4.60	(75)	5800	(400)	6090	(420)	310	(420)	2000	3000	64	(29)	26	(35.2)
TXVA 92	CC CCW	5.60	(92)	5500	(380)	5800	(400)	380	(515)	1900	3000	64	(29)	26	(35.2)

(1) TXV pumps can be set for smaller maximum displacements (see page 39).
(2) For a mechanical efficiency at 85%.
(3) Higher speed - at full displacement - possible depending on flow required : please contact us.
(4) Value of the overhang torque of the only pump.

► Configurator for TXVA pumps

To obtain order code for your pump, fill in the parameters (❷, ❸, ❹, ❺, ❻, ❼) depending on the options required, using the table below.

TXVA	...	...	...	...	...	...
❶	❷	❸	❹	❺	❻	❼

❶	**TXVA pump**				
❷	**Displacement**		**75**	**92**	**...**
❸	**Direction of rotation**		Clockwise rotation (CW)		**R**
			Counterclockwise rotation (CCW)		**L**
❹	**Flange**		SAE C - 2 bolts		**C1**
			SAE C - 4 bolts		**C2**
❺	**Shaft end**	Splined SAE J744	14T 12/24 DP - SAE C		**S1**
		Keyed SAE J744	Ø1 1/4" UNF 2A - SAE C		**K1**
❻	**Ports**	UNF Threaded	Inlet : 1 7/8" 12UN 2B		**U1**
			Outlet : 1 1/16" 12UN 2B		
		BSP Threaded	Inlet : G1 1/2"		**G1**
			Outlet : G 3/4"		
❼	**Control types**		Constant Pressure		**PC**
			Flow-Pressure Regulator		**LS**
			Closure Plate		**PF**



▶ Torque absorbed as a function of pump output pressure (with a mechanical efficiency considered at 85%)

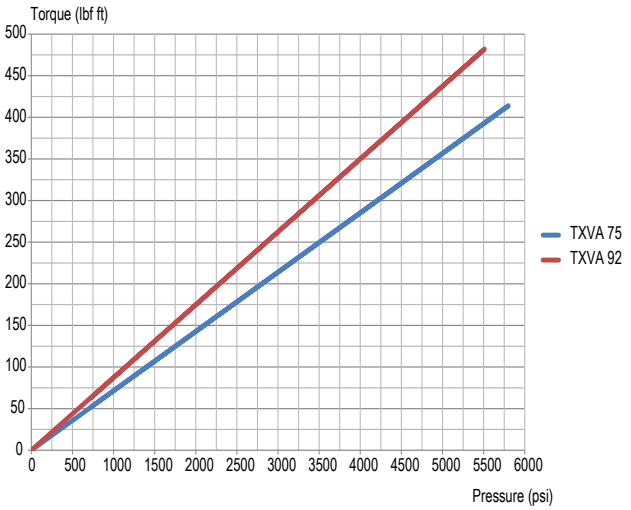

▶ Flow

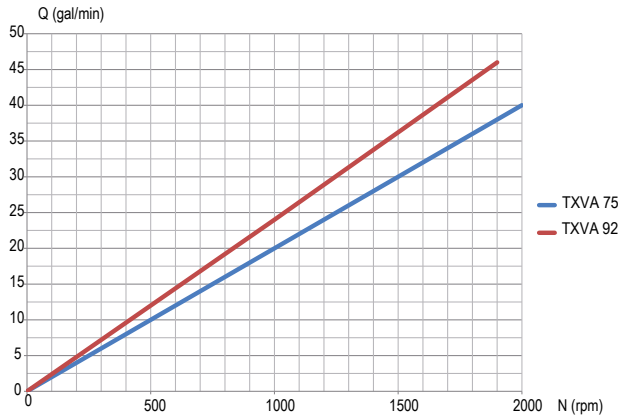

▶ Dimensions

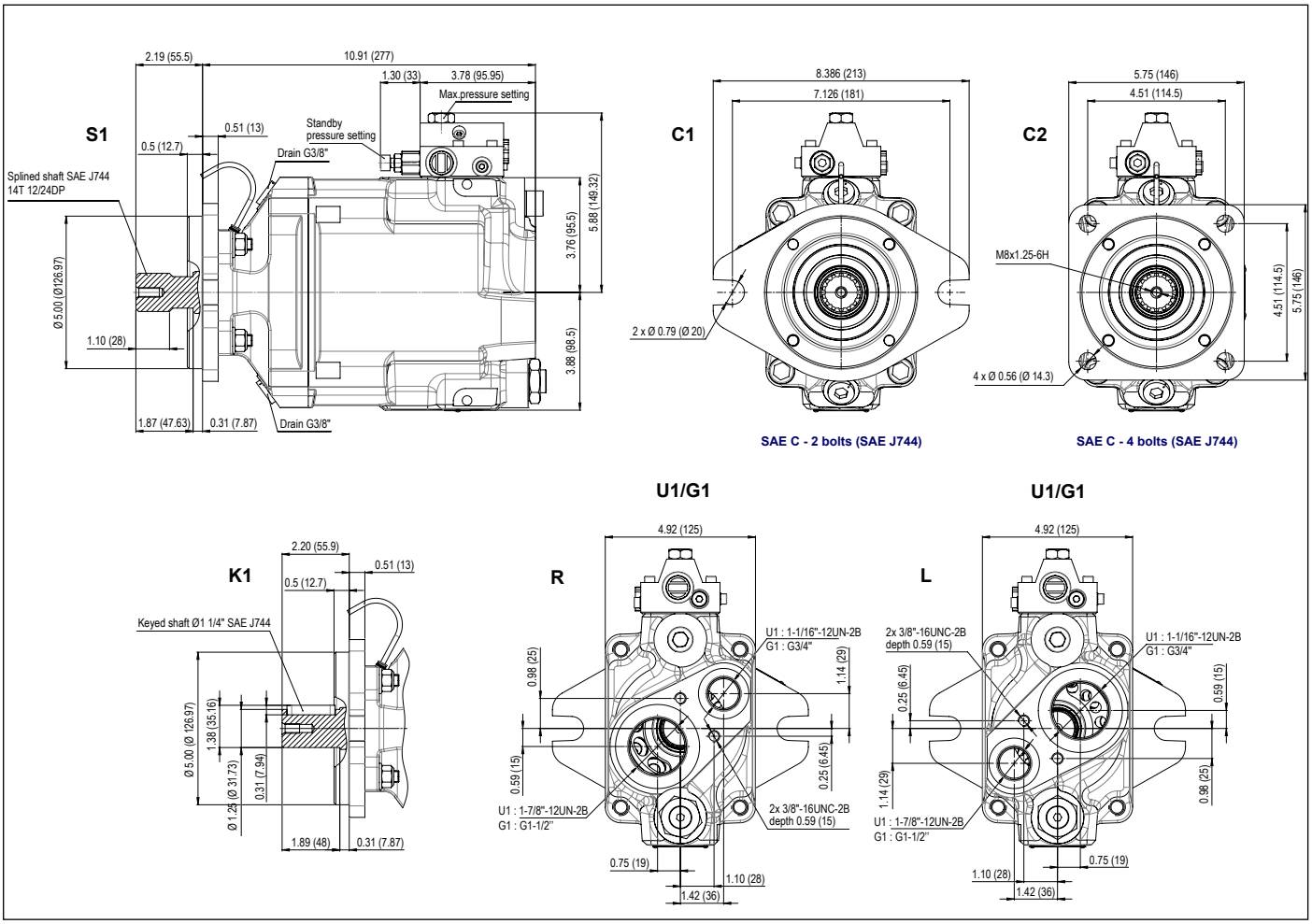

Dimensions in inches (mm).

LS | Flow-Pressure Regulator

IMPORTANT:
Without further specifications in the order:
PC set at 100 bar, Stand-by at 30 bar.

► Control of Q and P (LS: "Load-Sensing")

This regulation (LS) allows continuous control of the flow and maximum discharge pressure of the pump. With this arrangement, it is easy to envision all possible combinations:

- High flow and low pressure,
- High pressure and low flow.

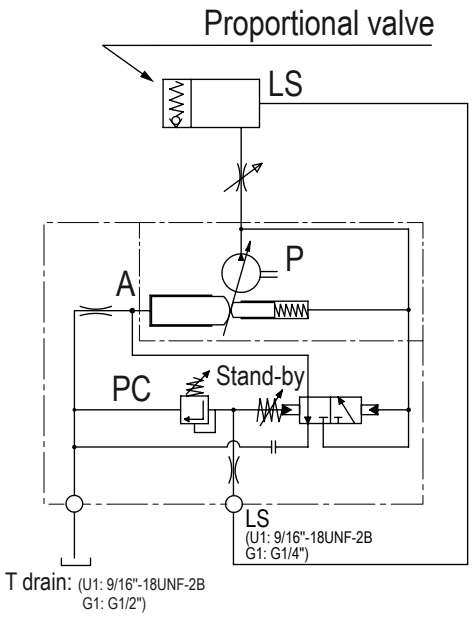

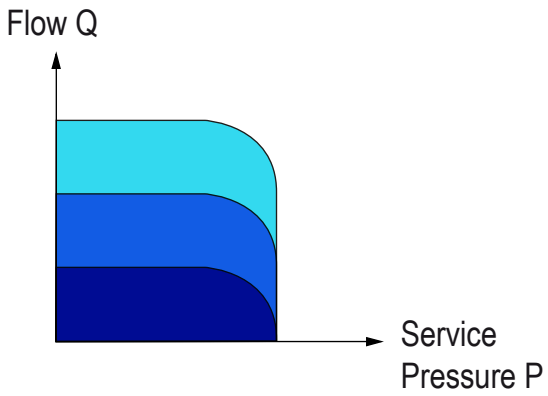

LS adapter with integrated filter | LEDUC CODE

Filter fitting for LS line connection

Kit reference	LS dimension	Type of pump
0525567	G1/4"	TXV
C001144	9/16-18 UNF	TXVA (SAE)

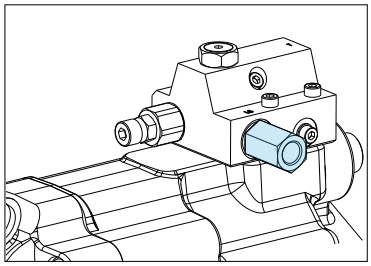

► Technical characteristics

- It protects the LS regulator against contamination coming from the circuit.
- Filter can be removed for maintenance.
- Filtration: 150 microns.

► Drawings for both versions of the kit (dimensions in mm):

0525567

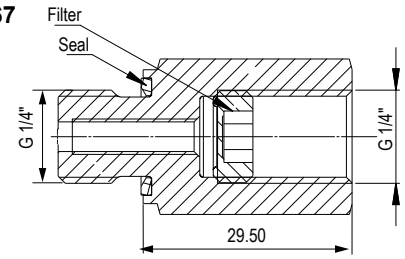

C001144

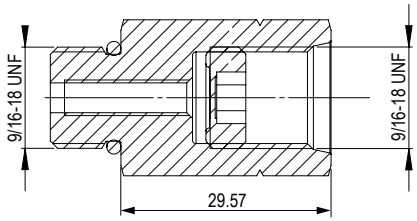

SEAL + FILTER | LEDUC CODE K000028

The LS filter protects the TXV's Load Sensing valve against contaminations coming from the hydraulic circuit.
Mounted as standard on all TXV pumps.



KIT CLOSING PLATE + SEAL | LEDUC CODE P001512

FOR TXV 130 THROUGH SHAFT

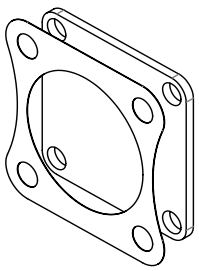

CARDAN PLATE - DIN 90 and DIN 100

The cardan plate enables the pump shaft to be connected to a cardan shaft with interface as on drawing on the right.
Note: the maximum admissible torque is limited by the drive shaft.
The deflector is supplied with the cardan plate.

Type	LEDUC code	ØA	ØB	C	D	E	F	ØG	H
DIN 90	**056315**	90	47	43	2	10	62	55	15
DIN 100	**0519040**	100	57	43	2	10	64	55	15

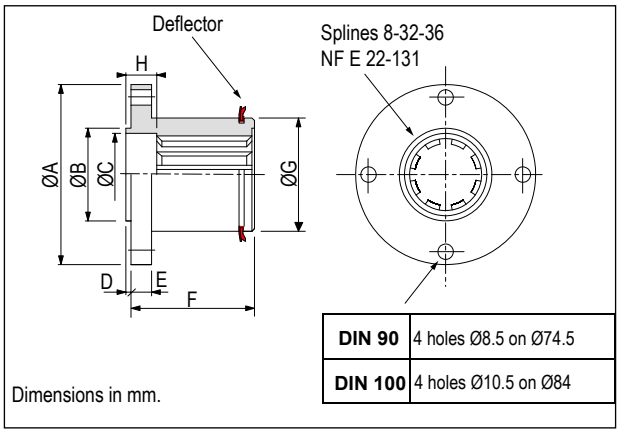

MAXIMUM DISPLACEMENT SETTING SCREW

TXV 40-120

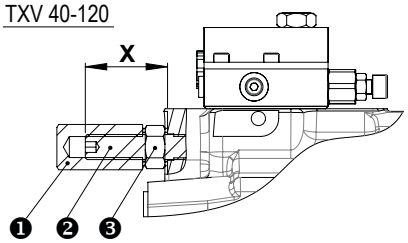

The TXV pumps from 40 to 150 cc/rev are made as standard to be able to use a setting screw:

- Reference : **0518386** for TXV 40 to 120 pumps
- Reference : **0523899** for the TXV 130* and TXV 150*

**Except TXV through shaft.*

The pump displacement can thus be adjusted to exactly what is needed.

TXV 130-150

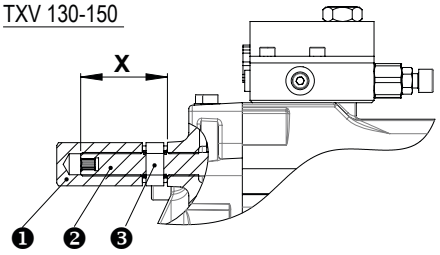

► How to set maximum displacement

Unscrew ❶ completely, loosen nut ❸ and screw ❷ to obtain dimension **X** on graph below, and the corresponding displacement (see figure).

- For TXV 150 : 1 turn of the screw changes the displacement by 7.5 cc.
- For TXV 130 : 1 turn of the screw changes the displacement by 6.5 cc.
- For TXV 120: 1 turn of the screw changes the displacement by 9 cc.
- For TXV 92 to TXV 40: 1 turn of the screw changes the displacement by 8 cc.

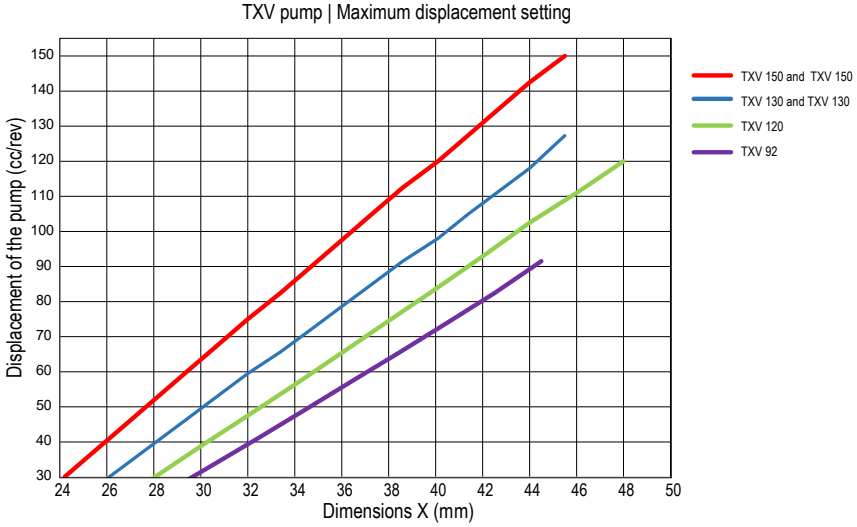

SETTING OF THE REGULATION

► Stand-by

TXV pumps are supplied as standard with standby pressure set at 30 bar.
On request, this standby pressure can be set between 25 and 60 bar.

► Maximum pressure

Cancellation pressure PC of the pump must be the same as the maximum working pressure of your installation. This PC pressure should be specified in the order. If no PC setting is specified, pumps will be supplied with PC set at 100 bar.

► Relief valve in the entry plate of proportional valve

Must be set 25 to 30 bar higher than the chosen PC pressure.

► Response time

Response time of TXV pumps, from zero flow up to full flow, can be adapted.

For further information or advice, please contact our Customer Service Department.