Hydraulic Pump & Motor Division Europe
Parker Hannifin Mfg. Sweden AB
Flygmotorvägen 2
461 38 Trollhättan, Sverige
Ph: +46520 40 46 00
www.parker.com/MSGE

ENGINEERING **YOUR** SUCCESS.

# Pump & Motor Division Europe
# P2/P3 Series

**P2105L00C1C20LA20N00T1B1U**

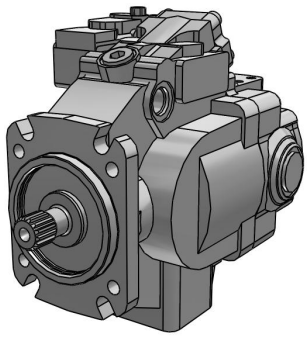

*Interactive 3D graphic, click to activate and rotate*
*(3D capable PDF viewer required)*

| Technical Data | |
|---|---|
| Part No. | P2105L00C1C20LA20N00T1B1U |
| Series | P2/P3 Series |
| Pump Series | P2 - Standard |
| Displacement | 105 - 105 cc/rev (6.4 cu.in./rev) |
| Rotation | L - Counterclockwise (CCW) |
| Max Volume Stop Setting (70% - 100%) | 00 - Default (full pump displacement) |
| Shaft Options | C1 - SAE C Spline |
| Mounting Flange | C - SAE C Pilot (5 in.) |
| Pressure Setting of Max Pressure Control [bar/10] | 20 |
| Controls | LA - Load sensing (2 spool)/Pmax without bleed orifice |
| Differential Pressure | 20 - DIFFERENTIAL PRESSURE SETTING |
| Seal Type | N - Nitrile, single shaft seal |
| Torque Control Setting Low range | N/A |
| Torque Control Setting High Range | N/A |
| Torque Set for Pa Pb Lb Controls | 00 |
| Through Drive Configuration | T1 - Prepared for Through Drive (cover plate) |
| Port Location & Threads | B - Side - Inline Flange Ports - ISO 6149 / Metric threads |
| Multiple Pump Options | 1 - Shipped as individual pump |
| Paint / Special Modifications | U - Unpainted pump |

PDF Datasheet Powered by CADENAS PARTsolutions

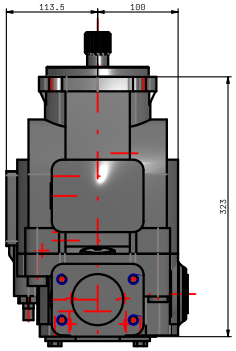


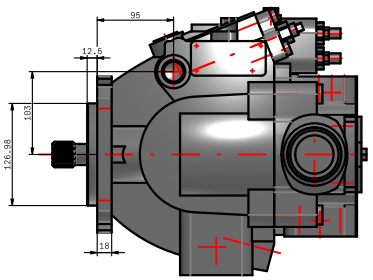


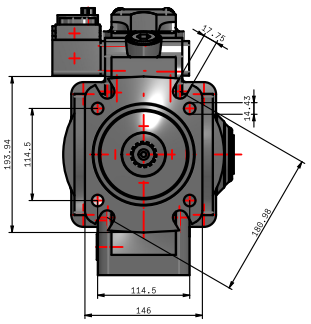


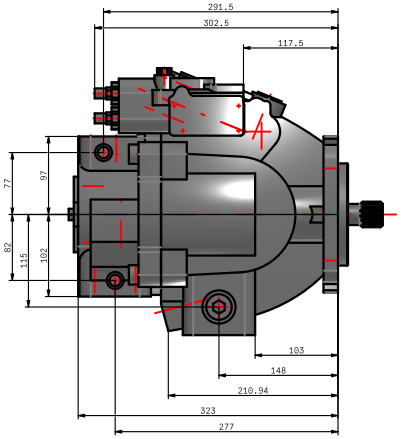


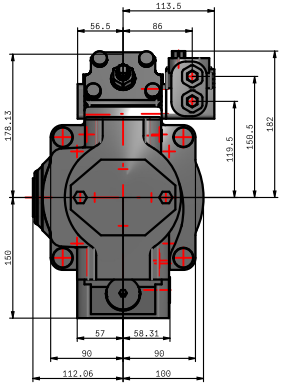


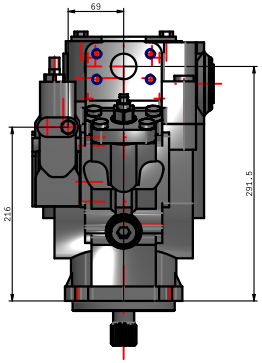


For performance data, dimensions and deviations from standards, see catalog.

Disclaimer:
Parker PMDE has a continuous policy of product development and although the Company reserves the right to change specifications, it attempts to keep customers informed of any alterations. This publication is for general information only and customers are requested to contact their local Parker dealer for detailed information and advice on a products suitability for specific applications. All products are sold subject to the company's Standard conditions of sale.

P2105L00C1C20LA20N00T1B1U

Price: contact Parker

PDF Datasheet Powered by CADENAS PARTsolutions