# GROUP 2 PUMPS

## CONSTRUCTIVE CHARACTERISTICS:

| *PART* | *MATERIAL* | *CHARACTERISTICS* |
|---|---|---|
| *GEARS* | **Hardened steel UNI 7846** | **Rs= 1250 N/mm²**<br>**Rm= 1450 N/mm²** |
| *FLANCE AND COVER* | **G25 / G30 cast iron** | **Rs= 300 N/mm²**<br>**Rm= 450 N/mm²** |
| *BEARINGS* | **Avional**<br>**Bearings with DU** | **Rs= 350 N/mm²**<br>**Rm= 390 N/mm²** |
| *BODY* | **Etruded in aluminium alloy**<br>**Series 7020** | **Rs= 350 N/mm²**<br>**Rm= 390 N/mm²** |
| *O-RINGS* | **Buna N**<br>**Viton** | **90 Shore, up to 90°C**<br>**80 Shore, for high temperature** |
| *ANTIEXTRUSION* | **Zitel** | **With glass fibres** |

**Rs= Enervation load**
**Rm= Breaking load**

## GENERAL CHARACTERISTICS:

**Maximum pressures up to 300 bar.**
**Weight : from 3.1 Kg to 4.3 kg**
**Maximum speed up to 4.000 rpm.**
**Type of shafts:** **Taper 1:8 and 1:5**
**Oldham**
**Slined DIN 5482 17x14.**
**SAE A splined-9 TEETH**
**SAE A cylindrical - Ø15.85 - SAE A 11 TEETH**
**Type of flanges:** **European standard**
**German standard**
**SAE A standard.**

**Displacements from 4 cc/rev to 30cc/rev.**
**The displacements are available according this table:**

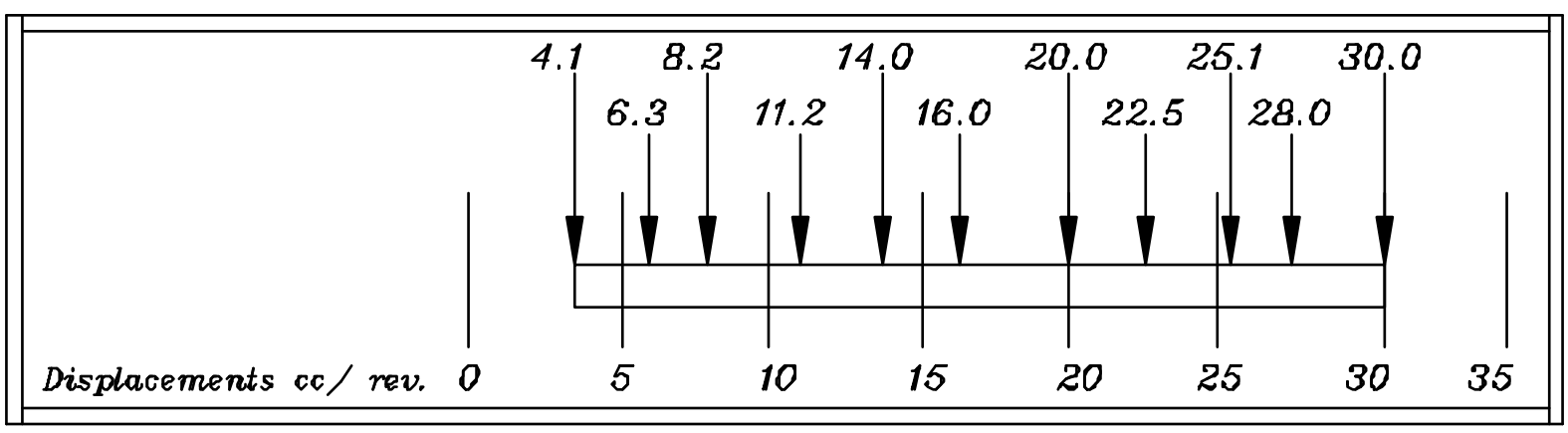


**There is also available a special version with built-in support.**

## DRIVE:

**The connection of the pump to the motor must be done preferably with the use of a flexible coupling to avoid any radial and/or axial force on the shaft, otherwise pump efficiency will dramatically drop due to early wear of inner moving parts.**
**In any applications where the motion is trasmitted through belts, it is necessary to use a support to avoid any radial or axial load to the pump shaft.**
**In any applications where are used splined shafts ot Oldham couplings, it is suggested to assure a costant lubrification through grease or similar products.**

# GROUP 2 PUMPS

## WORKING CONDITIONS- LIMIT PERFORMANCES

**In normal working conditions there must be, in the suction pipe, a pressure lower than the atmospheric pressure.**

**The pressure range in suction must be:**

| | |
|---|---|
| Min. 0.75 bar (absolute) | MAX 2,0 bar (absolute) |

**The maximun pressure values "P1" are referred to a continuous working at 1500 rpm with standard hydraulic fluids with minimum viscosity of 10 cSt.**
**For heavier working conditions ( viscosity or high temperature ) it is necessary to reduce the "P1" values.**

**In the following table are described the admitted pressures:**

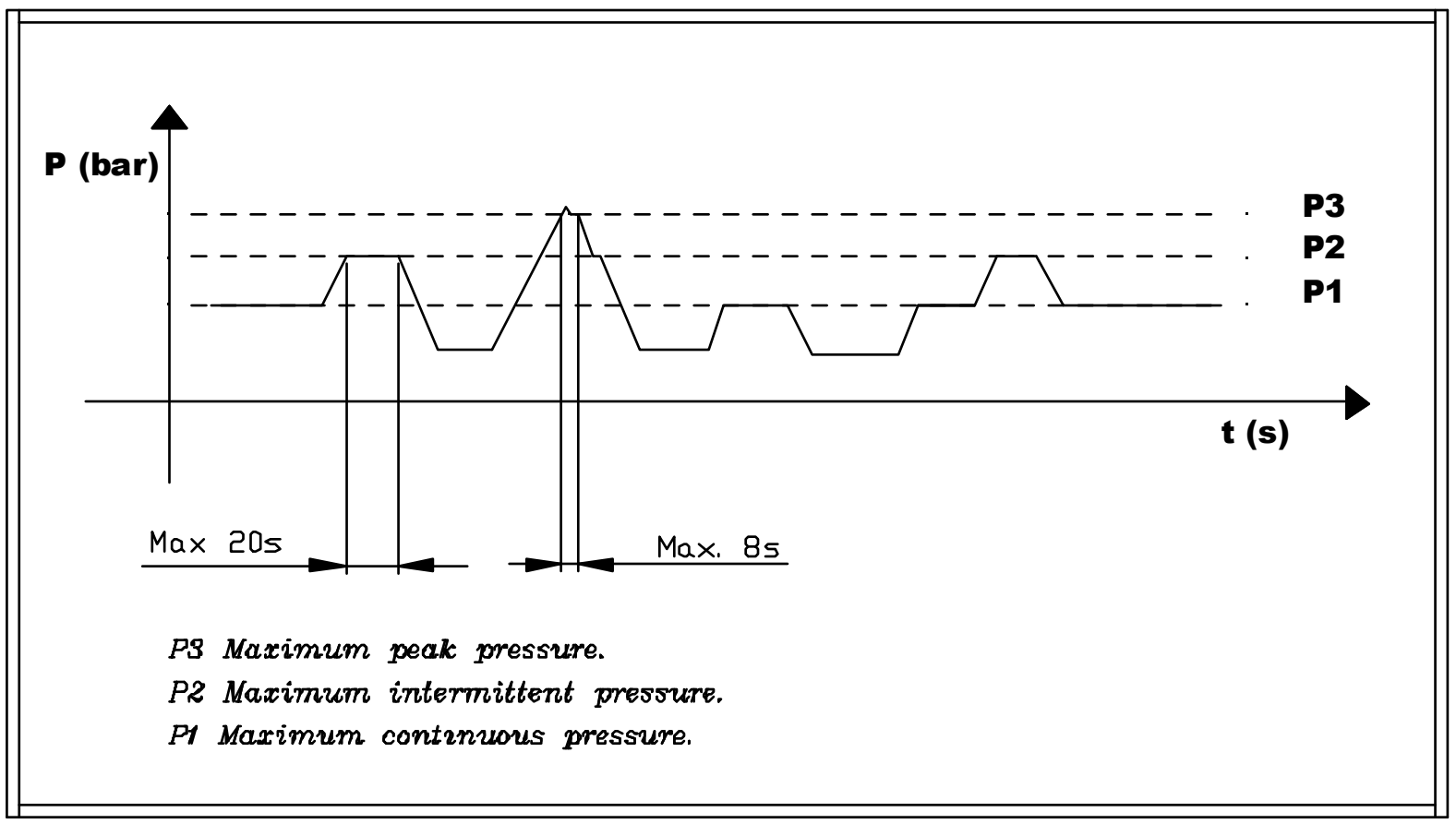


**The standard working speeds ( minimum and maximum) are the following:**

| | |
|---|---|
| Min. = 400 rpm | Max = ( See following table ) |

## DIRECTION OF ROTATION LOOKING AT THE SHAFT:

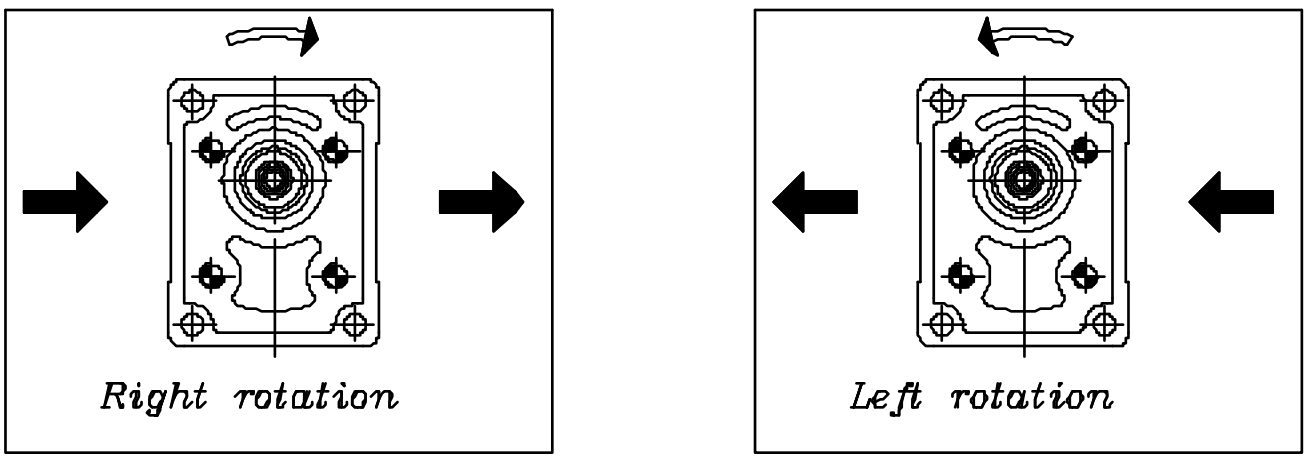

# GROUP 2 PUMPS

## FLOW CHARACTERISTICS CURVES

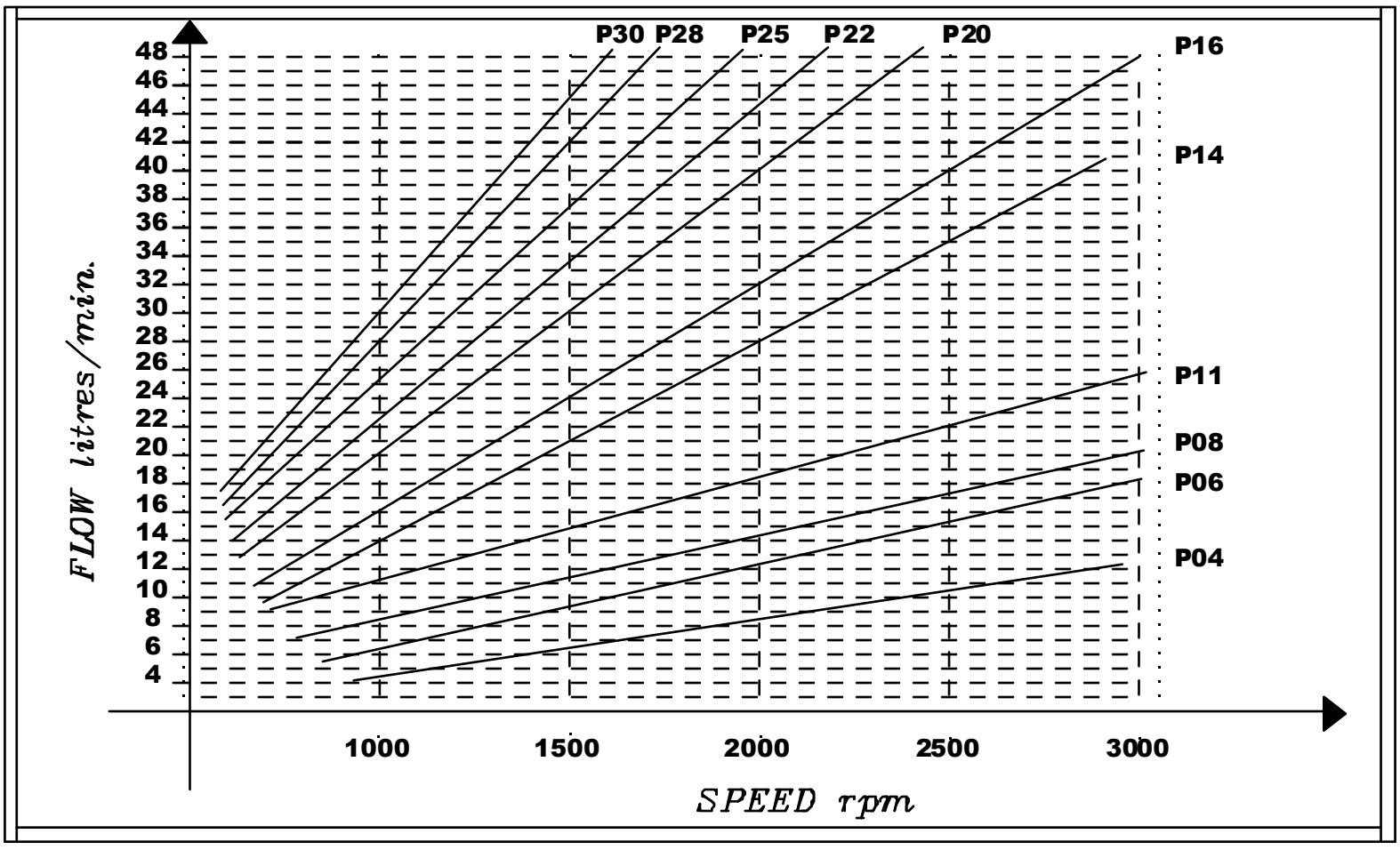


## ABSORBED TORQUE

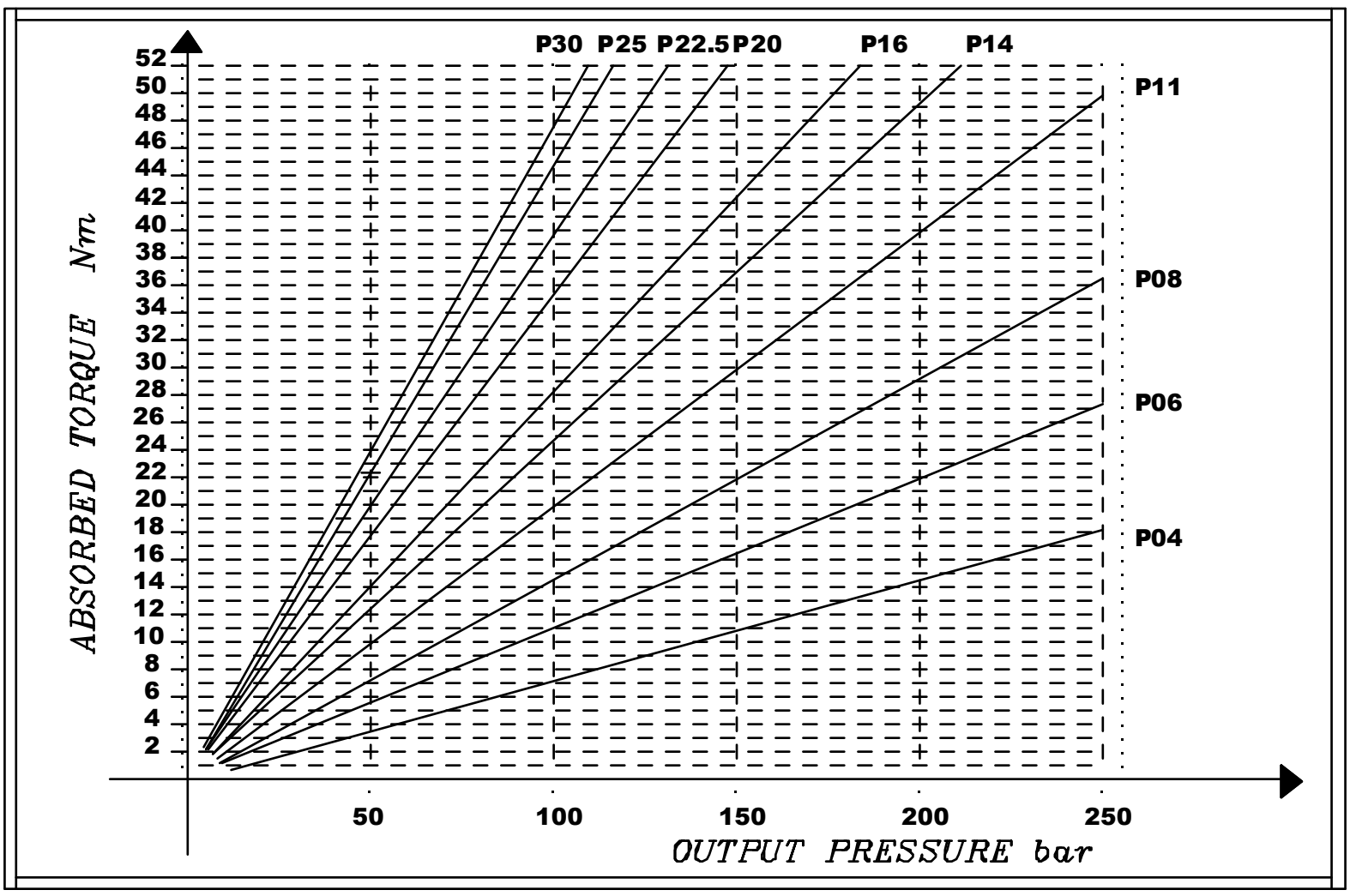


**NOTE**

**Above flow characteristics curves have been made considering a volumetric efficiency of 95%**

# GROUP 2 PUMPS

## PUMP CALCULATION

| | | |
|---|---|---|
| $V$ | **Displacement** | **cc / rev** |
| $Q$ | **Flow** | **l/min** |
| $P$ | **Power** | **kW** |
| $C$ | **Torque** | **Nm** |
| $N$ | **Speed** | **rpm** |
| $\Delta P$ | **Pressure** | **bar** |
| $n_v$ | **Volumetric efficiency** | **0.85** |
| $n_m$ | **Mechanical efficiency** | **0.9** |
| $n_t$ | **Total efficiency** | **0.80** |

$$Q = V \cdot n_v \cdot N \cdot 10^{-3} \qquad l/min$$

$$C = \frac{\Delta P \cdot V}{62.8 \cdot n_m} \qquad Nm$$

$$P = \frac{\Delta P \cdot V \quad N}{612000 \cdot n_t} \qquad kW$$

# GROUP 2 PUMPS- SAE "A" STANDARD

**VERSION:** P21 S2

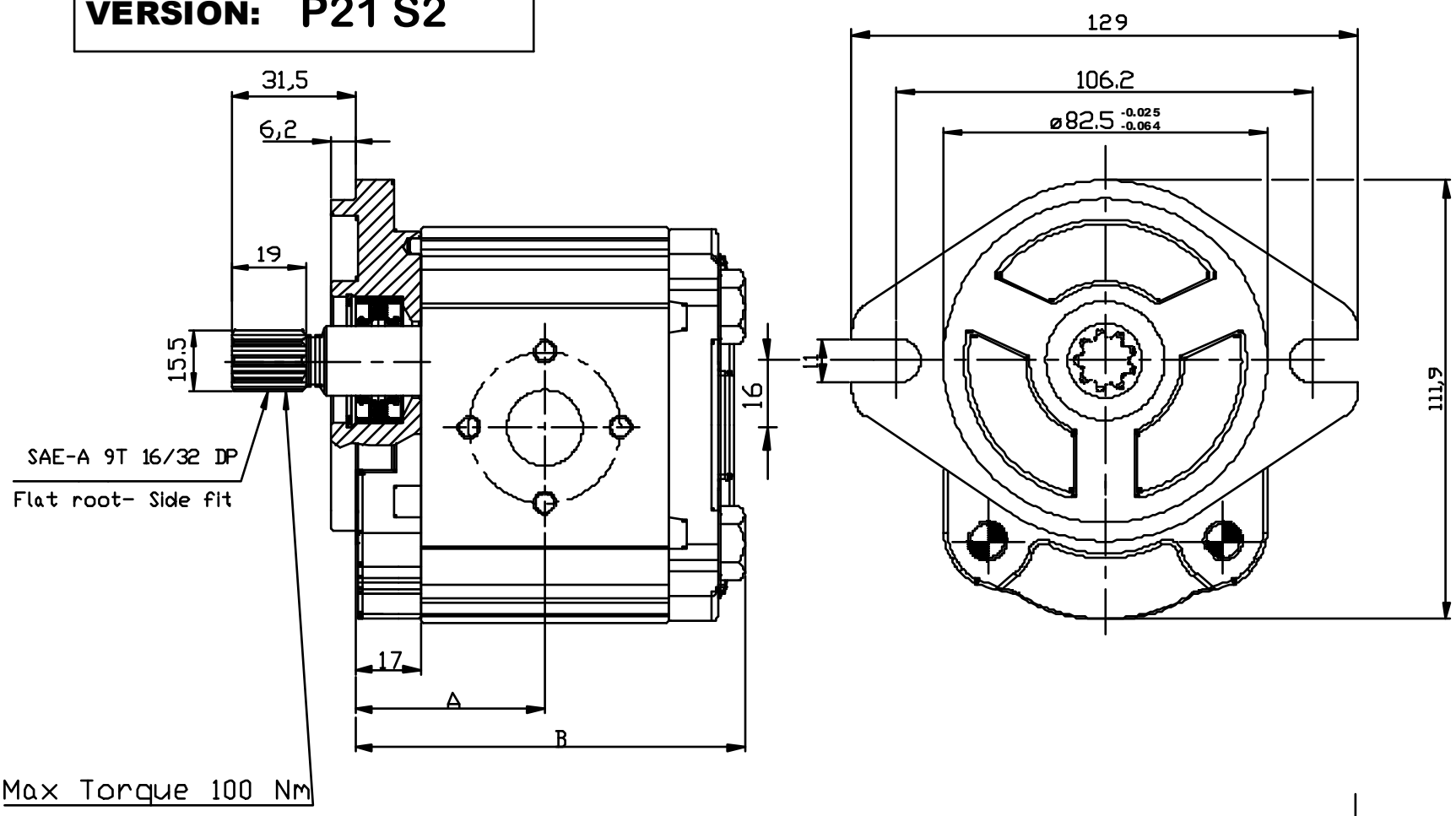


| Type | Displacement ( cc/rev ) | Max working pressure P1 ( bar ) | Peak pressure P3 ( bar ) | Max speed ( r.p.m) | Dimension A ( mm ) | Dimension B ( mm ) | Inlet port ØD | Inlet port ØA | Inlet port W | Outlet port ØD | Outlet port ØA | Outlet port W |
|---|---|---|---|---|---|---|---|---|---|---|---|---|
| **OT 200 P04** | 04,10 | 250 | 300 | 4000 | 41,00 | 84,50 | 13 | 30 | M6 | 13 | 30 | M6 |
| **OT 200 P06** | 06,20 | 250 | 300 | 3500 | 42,50 | 87,50 | 13 | 30 | M6 | 13 | 30 | M6 |
| **OT 200 P08** | 08,20 | 250 | 300 | 3500 | 44,00 | 90,50 | 13 | 30 | M6 | 13 | 30 | M6 |
| **OT 200 P11** | 11,20 | 250 | 300 | 3500 | 46,15 | 94,80 | 13 | 30 | M6 | 13 | 30 | M6 |
| **OT 200 P14** | 14,00 | 240 | 300 | 3000 | 48,15 | 98,80 | 20 | 40 | M8 | 13 | 30 | M6 |
| **OT 200 P16** | 16,00 | 240 | 300 | 3000 | 49,60 | 101,7 | 20 | 40 | M8 | 13 | 30 | M6 |
| **OT 200 P20** | 20,00 | 200 | 240 | 3000 | 52,50 | 107,5 | 20 | 40 | M8 | 13 | 30 | M6 |
| **OT 200 P22** | 22,50 | 170 | 210 | 2500 | 58,35 | 119,2 | 20 | 40 | M8 | 13 | 30 | M6 |
| **OT 200 P25** | 25,10 | 170 | 210 | 2500 | 60,25 | 123,0 | 20 | 40 | M8 | 13 | 30 | M6 |
| **OT 200 P28** | 28,00 | 140 | 180 | 2500 | 62,35 | 127,2 | 20 | 40 | M8 | 13 | 30 | M6 |
| **OT 200 P30** | 30,00 | 130 | 170 | 2000 | 63,75 | 130,0 | 20 | 40 | M8 | 13 | 30 | M6 |

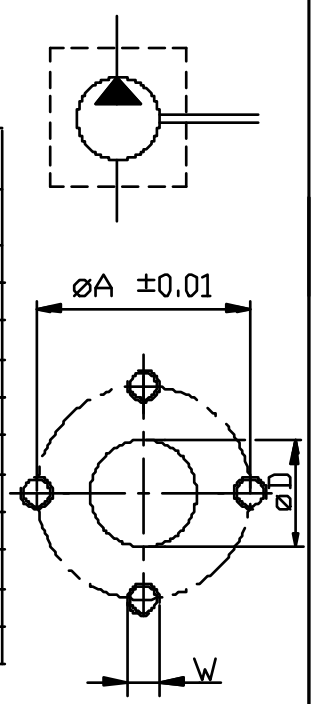


## EXAMPLE OF ORDERING CODE

**OT200 P 08 S / P 21 S2**

- OT200 — Series
- P — Pump
- 08 — Displacement ( see above table )
- S — Rotation: S = Anti-clockwise, D = Clockwise
- P — Body for European flanges
- 21 — SAE A -9T 16/32 DP shaft
- S2 — SAE- A flange

# GROUP 2 REVERSIBLE PUMPS AND MOTORS

## DRIVE SHAFTS

### SHAFT CODE 28

Max torque 140 Nm

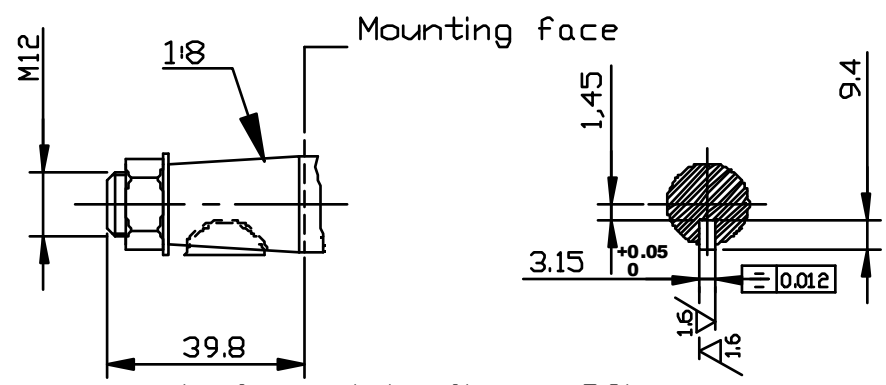


### SHAFT CODE 25

Max torque 140 Nm

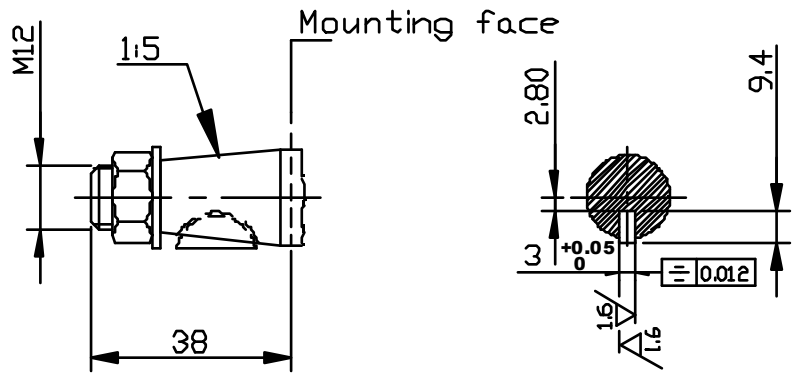


### SHAFT CODE 21

Max torque 100 Nm

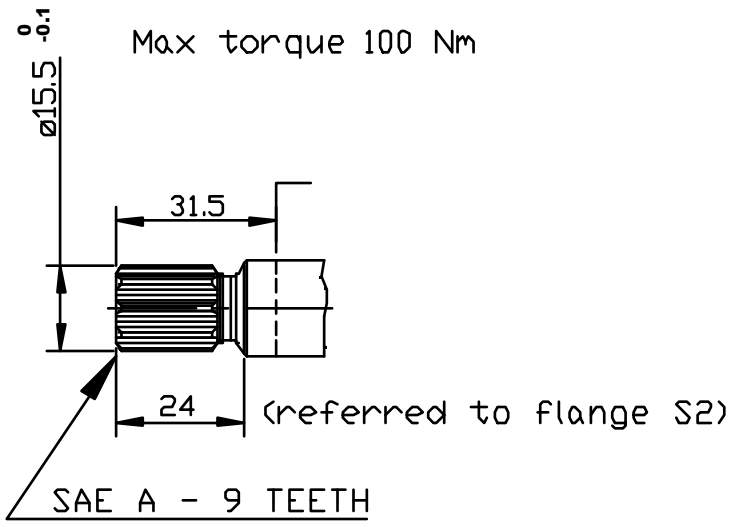


### SHAFT CODE 20

Max torque 170 Nm

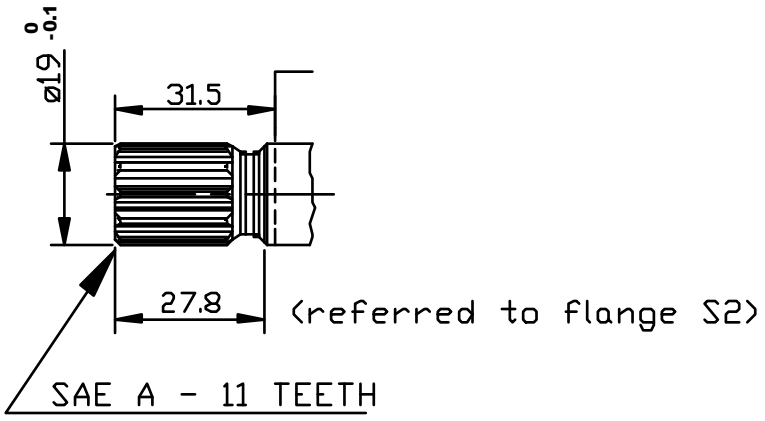


### SHAFT CODE 31

Max torque 70 Nm

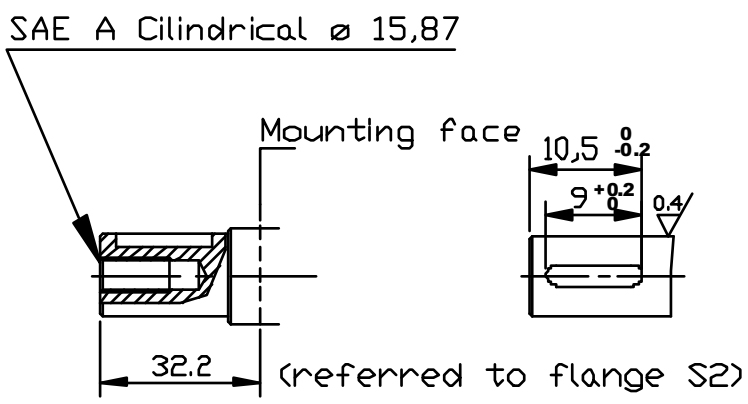


### SHAFT CODE 23

Max Torque 110 Nm

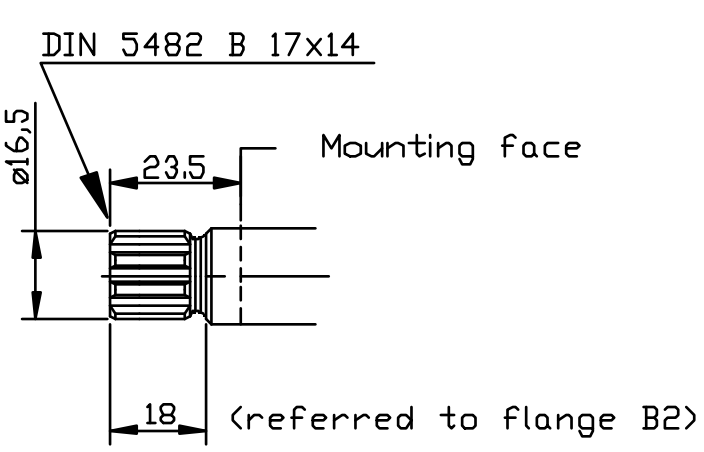


### SHAFT CODE 24

Max torque 70 Nm

