MPFX series

Maximum working pressure up to 0.8 MPa (8 bar) - Flow rate up to 900 l/min



Description

Return filter

Maximum working pressure up to 0.8 MPa (8 bar)
Flow rate up to 900 l/min

MPFX is a range of return filters for protection of the reservoir against the system contamination.
They are directly fixed to the reservoir, in immersed or semi-immersed position.
The filter output must be always immersed into the fluid to avoid aeration or foam generation into the reservoir.

Available features:

- Female threaded connections up to 2" and flanged connections up to 2", for a maximum flow rate of 900 l/min
- Multiple connections, to connect several return lines or drains
- Fine filtration rating, to get a good cleanliness level into the reservoir
- Bypass valve integrated into the filter element, to relieve excessive pressure drop across the filter media
- 2, 3 or 4 fixing holes for installation, to suit a variety of reservoir surfaces
- O-ring or Flat Seal to suit a variety of reservoir surfaces
- Oil dipstick, to easily check the level of the fluid into the reservoir (sold as separate item)
- Extension tube, to be used in deep reservoirs (sold as separate item)
- Diffuser, to reduce the risk of aeration, foaming and noise (sold as separate item)
- Filler plug, to fill cleaned fluid into the tank without an additional connection
- Visual, electrical and electronic clogging indicators
- MYclean interface connection, to protect the product against non-original spare parts
- External protective wrap, to optimize the flow through the element and to save the element efficiency against non-proper handling

Common applications:

- Light Industrial equipment
- Mobile application

Technical data

Filter housing materials

- Head: Aluminium
- Cover: Polyamide: MPFX 030-100-104-110
  Aluminium: MPFX 181-182-184-191-192-194 400-410-450-750
- Bowl: Polyamide

Pressure

- Test pressure: 1.2 MPa (12 bar)
- Min. Burst pressure: 2.4 MPa (24 bar)
- Pulse pressure fatigue test: 1 000 000 cycles with pressure from 0 to 0.8 MPa (8 bar)

Bypass valve

- Opening pressure 0.175 MPa (1.75 bar) ±10%
- Opening pressure 0.3 MPa (3 bar) ±10%

Filter element features

Filter		Filter element	
MPFX		MFX	
Δp Element type			
Element media	**Construction**	**Δp Series**	**Δp**
A - Microfiber	Standard	D	10 bar
M - Wire mesh	Standard	D	10 bar
P - Paper	Standard	D	10 bar
Please see ordering code tables to check element Δp series availability based on filter features.			
Flow direction through the filter element: From OUT to IN			

Seals

- Standard NBR series A or W
- Optional FPM series V or Z

Temperature

From -25 °C to +110 °C

Note

MPFX filters are provided for vertical mounting

Weights [kg] and volumes [dm³]

Filter series	Weights [kg]					Volumes [dm³]				
	Length	10	20	30	40	Length	10	20	30	40
MPFX 030		0.40	-	-	-		0.29	-	-	-
MPFX 100		0.61	0.64	0.67	0.74		0.64	0.85	1.20	1.65
MPFX 104		0.82	0.96	1.02	1.25		0.64	0.85	1.20	1.65
MPFX 110		0.64	0.68	0.71	0.78		-	-	-	-
MPFX 181		2.20	3.00	-	-		2.50	4.00	-	-
MPFX 182		2.30	3.10	-	-		2.50	4.00	-	-
MPFX 184		2.55	3.45	-	-		2.65	4.45	-	-
MPFX 191		-	3.00	-	-		-	4.25	-	-
MPFX 192		-	3.10	-	-		-	4.25	-	-
MPFX 194		-	3.45	-	-		-	4.45	-	-
MPFX 400		3.35	3.65	3.90	-		3.70	4.60	5.40	-
MPFX 410		3.55	3.85	4.10	-		3.70	4.60	5.40	-
MPFX 450		3.95	4.25	4.50	-		3.70	4.60	5.40	-
MPFX 750		6.30	-	-	-		8.45	-	-	-

Flow rates [l/min]

Filter series	Length	Filter element design - D series					Filter element design - D series		
		A0003	A0006	A0010	A0016	A0025	M0025 M0060 M0090	P0010	P0025
MPFX 030	**10**	7	10	24	29	47	84	60	66
MPFX 100-104-110	**10**	18	20	53	56	65	153	87	96
	20	28	38	65	75	95	158	111	123
	300	48	55	125	135	169	289	224	251
	4	79	89	180	185	198	306	264	289
MPFX 181-182-184	**10**	127	148	235	243	278	441	285	299
	20	231	262	358	382	388	472	404	412
MPFX 191-192-194	**20**	261	305	489	528	546	696	583	598
MPFX 400	**10**	150	171	294	304	350	585	370	390
	20	237	252	454	462	589	868	619	645
	30	248	288	553	609	621	885	680	703
MPFX 410	**10**	146	167	277	285	325	512	341	357
	20	226	239	396	402	485	644	503	519
	30	236	269	462	497	505	653	539	553
MPFX 450	**10**	150	171	294	304	350	585	370	390
	20	237	252	454	462	589	868	619	645
	30	248	288	553	609	621	885	680	703
MPFX 750	**10**	392	465	623	700	769	929	804	819

Maximum flow rate for a complete return filter with a pressure drop Δp = 0.5 bar.
The reference fluid has a kinematic viscosity of 30 mm^2/s (cSt) and a density of 0.86 kg/dm^3.
For different pressure drop or fluid viscosity we recommend to use our selection software available on www.mpfiltri.com.
You can also calculate the right size using the formulas present on the FILTER SIZING paragraph at the beginning of the full catalogue or at the beginning of the filter family brochure.
Please, contact our Sales Department for further additional information.

Hydraulic diagram

Filter series	17/30 - with bypass 1.75 bar/ 3 bar	
	Style 1 connection	Style 2 connections
MPFX 030	•	-
MPFX 100	•	-
MPFX 104	•	-
MPFX 110	-	•
MPFX 181	•	-
MPFX 182	-	•
MPFX 184	•	•
MPFX 191	•	-
MPFX 192	•	-
MPFX 194	•	•
MPFX 400	•	-
MPFX 410	-	•
MPFX 450	•	-
MPFX 750	•	-

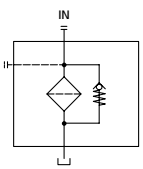

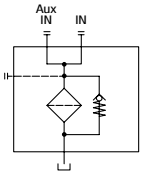

Pressure drop

Filter housings Δp pressure drop

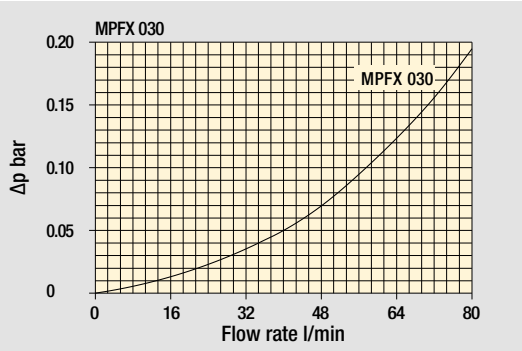

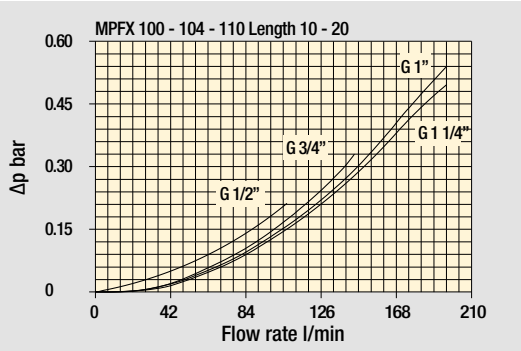

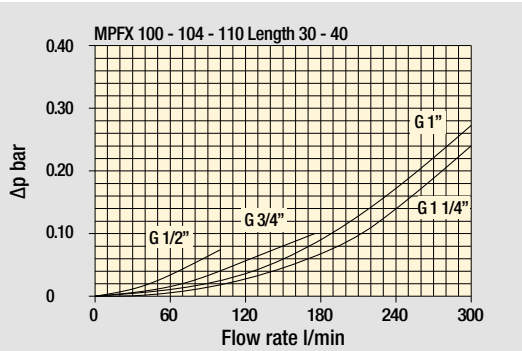

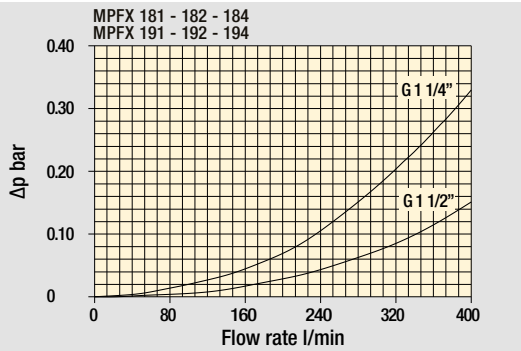

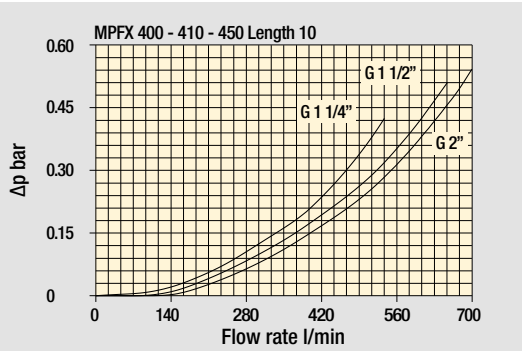

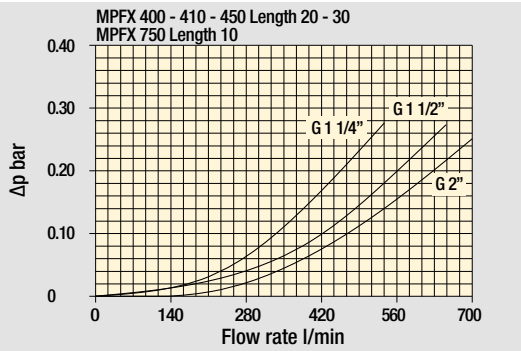

Bypass valve pressure drop

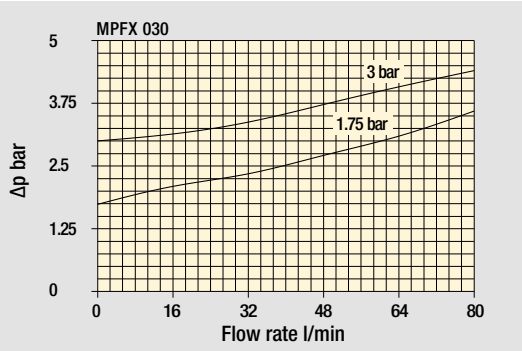

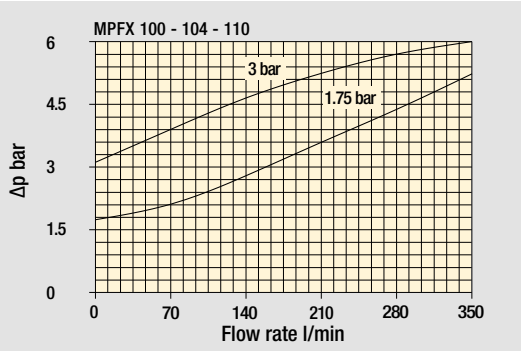

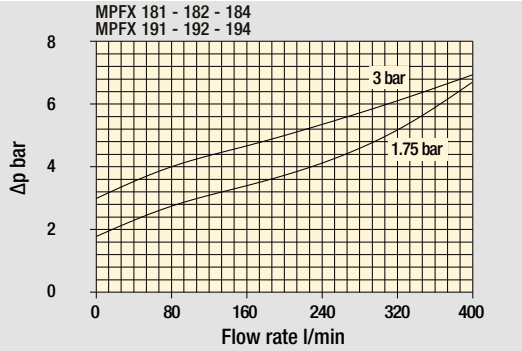

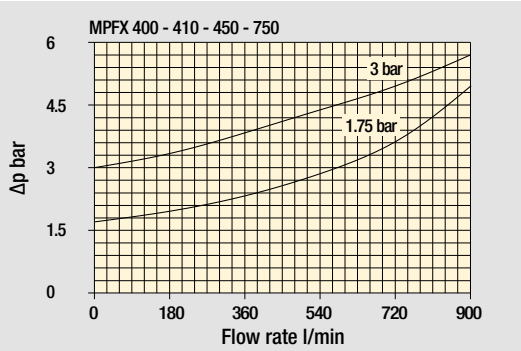

The curves are plotted using mineral oil with density of 0.86 kg/dm^3 in compliance with ISO 3968. Δp varies proportionally with density.

Standard - Single IN port

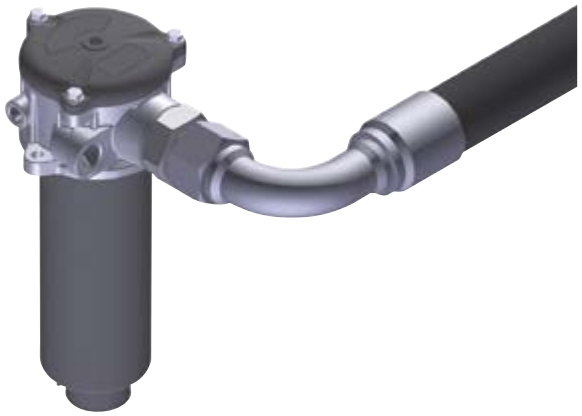

Double IN port
Option: double indicator port

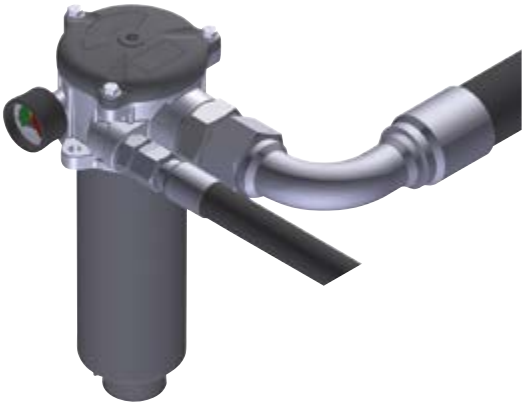

Double IN port - Drain port
Option: indicator port

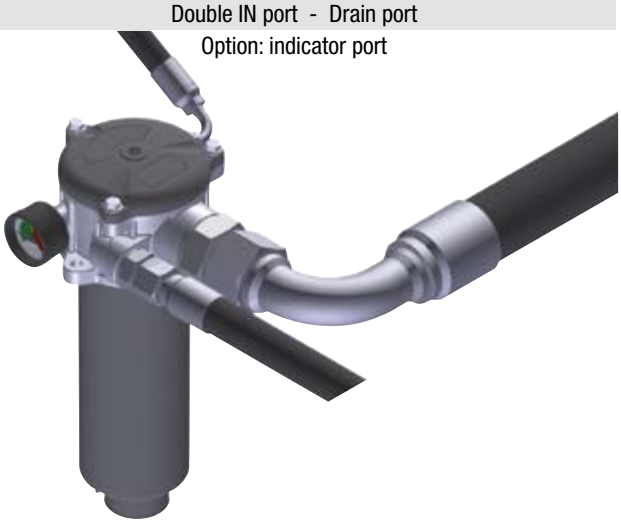

Double IN port - Double drain port

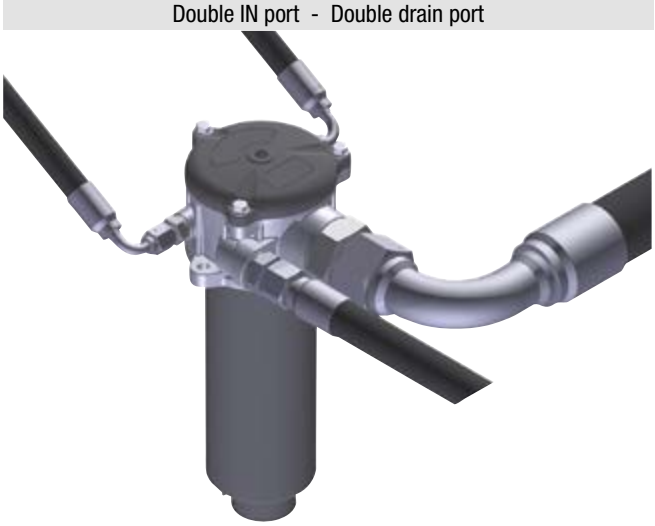

Designation & Ordering code

COMPLETE FILTER

Example 1:	MPFX	181	10	A0025	D	A	30	FG112	0	1T	NN	P01	NN
Example 2:	MPFX	191	20	P0010	D	V	17	FS024	0	1T	SN	P01	NN

Series

MPFX Filter featuring MYCLEAN Filter Element

Size

181 **191**

Length

	Size 181	Size 191
10	•	-
20	•	•

Filtration rating (filter media)

MYCLEAN

A0003	Inorganic microfiber	3 µm
A0006	Inorganic microfiber	6 µm
A0010	Inorganic microfiber	10 µm
A0016	Inorganic microfiber	16 µm
A0025	Inorganic microfiber	25 µm
M0025	Wire mesh	25 µm
M0060	Wire mesh	60 µm
M0090	Wire mesh	90 µm
P0010	Resin impregnated paper	10 µm
P0025	Resin impregnated paper	25 µm

zerospark+

Z0003	Antistatic in. microf.	3 µm
Z0006	Antistatic in. microf.	6 µm
Z0010	Antistatic in. microf.	10 µm
Z0016	Antistatic in. microf.	16 µm
Z0025	Antistatic in. microf.	25 µm

Element Δp

D 10 bar

Seals and treatments

		A0xxx	M0xxx	P0xxx	Z0xxx
A	NBR	•	•	•	•
V	FPM	•	•	•	•
W	NBR with filter and components surface treatment	•	•	-	•
Z	FPM with filter and components surface treatment	•	•	-	•

Bypass

17 With bypass 1.75 bar

30 With bypass 3.0 bar

Connections

FG114	G 1 1/4”	**FN114**	1 1/4” NPT	**FS020**	SAE 20 - 1 5/8” - 12 UN
FG112	G 1 1/2”	**FN112**	1 1/2” NPT	**FS024**	SAE 24 - 1 7/8” - 12 UN

Additional connections

0 Without additional connections

Connections for clogging indicators

1T With top indicator connection, with metal plug

Additional features

NN Without additional features

SN With flat seal on head

Execution

P01 Standard catalogue item

Certificates

NN None

CLOGGING INDICATORS

See pages 776-777

BVA Axial pressure gauge
BVR Radial pressure gauge
BVP Visual pressure indicator with automatic reset
BVQ Visual pressure indicator with manual reset
BEA Electrical pressure indicator
BEM Electrical pressure indicator
BLA Electrical / visual pressure indicator

ACCESSORIES

See page 270

TE Polyamide extension tube
T5 Filler plug M30x1.5
DPT Dipstick

Dimensions

MPFX181		
Filter length	**H1 [mm]**	**H2 [mm]**
10	235	255
20	448	475

Connection	H3 [mm]
FG114	35
FN114	
FS020	
FG112	37
FN112	
FS024	

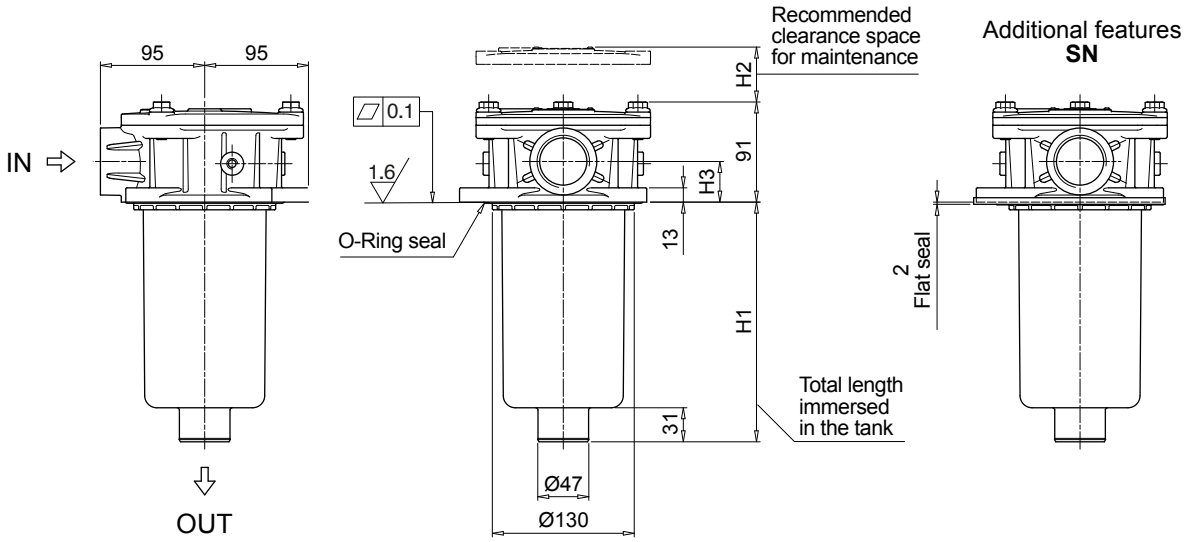

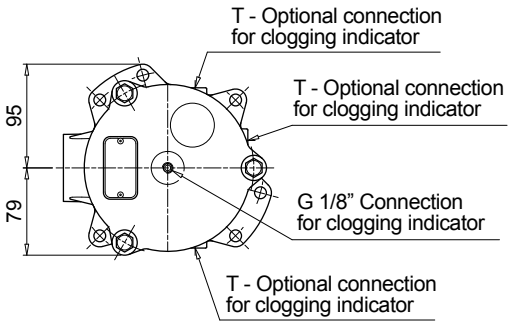

HOLES ON THE TANK
Option for 3 and 4 screws

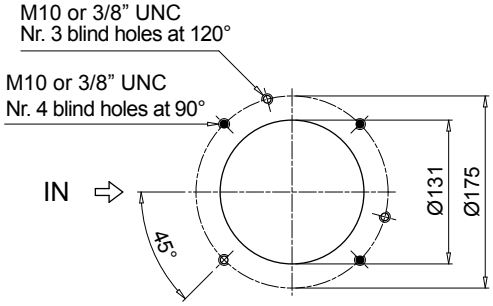

Order number for spare parts

MPFX 100

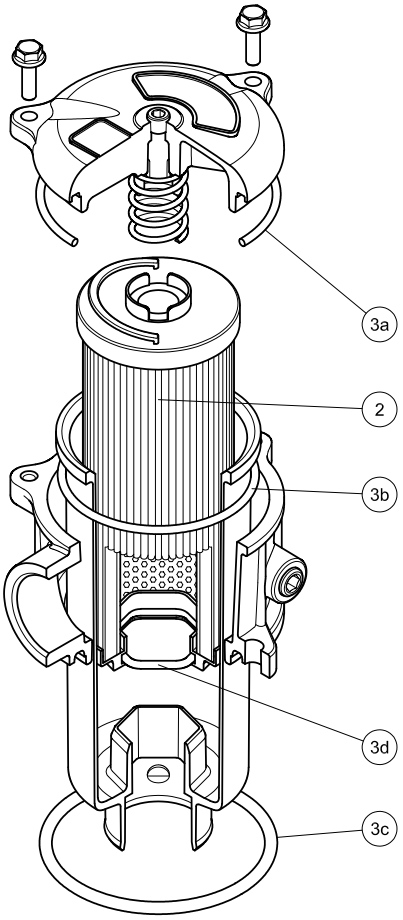

MPFX 181

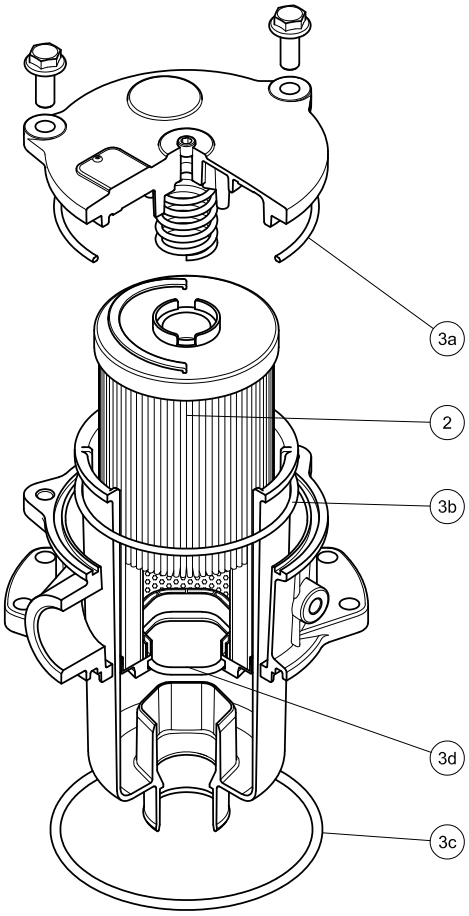

O-RING SEAL

Item:	Q.ty: 1 pc. (2)	Q.ty: 1 pc. (3) (3a ÷ 3d)	
Filter series	**Filter element**	**Seal Kit code number NBR**	**FPM**
MPFX 030	See order table	AK021000450	AK021000451
MPFX 100-110		AK021000452	AK021000453
MPFX 181-182		AK021000456	AK021000457
MPFX 184		AK021000460	AK021000461
MPFX 191-192		AK021000458	AK021000459
MPFX 194		AK021000462	AK021000463
MPFX 400-410		AK021000468	AK021000469
MPFX 450		AK021000470	AK021000471
MPFX 750		AK021000472	AK021000473

MPFX 104

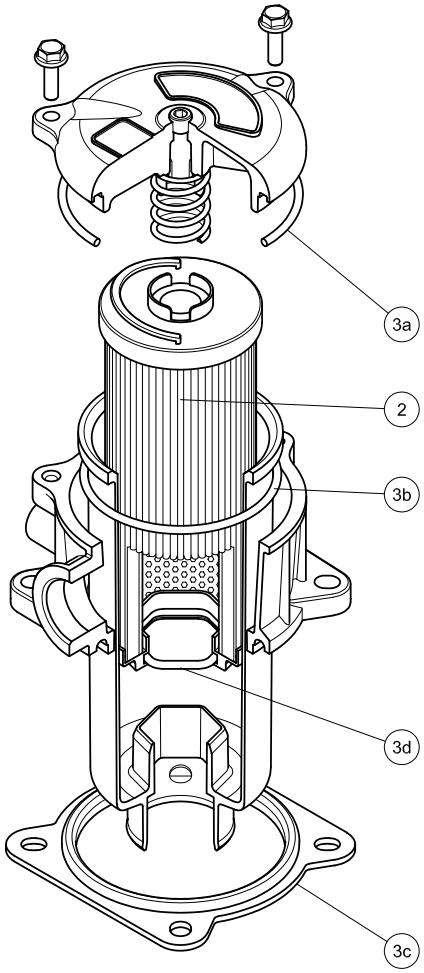

MPFX 181

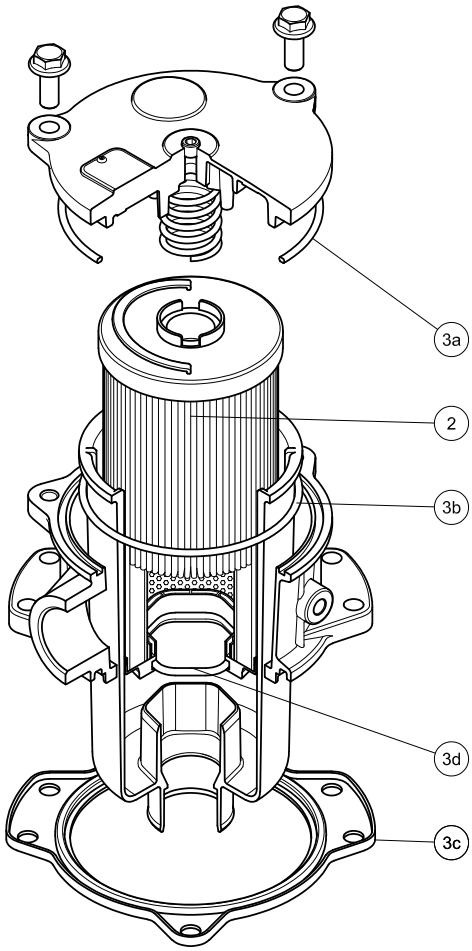

FLAT SEAL

Item:	Q.ty: 1 pc. (2)	Q.ty: 1 pc. (3) (3a ÷ 3d)	
Filter series	**Filter element**	**Seal Kit code number NBR**	**FPM**
MPFX 104	See order table	AK021000454	AK021000455
MPFX 181-182		AK021000466	AK021000467
MPFX 191-192		AK021000466	AK021000467

MYCLEAN

THE X CONCEPT FOR OUR FILTERS

**Protect the performance of your system with MYclean.
Quality and efficiency are fundamental for MP Filtri:
this exclusive new filter element possesses polygon shape geometry and specific seal that ensures only original spare parts can be used - ensuring correct operation and higher system reliability.**

MPLX series

with MYCLEAN MLX Filter Element



- **Protects the machine from improper use of non-original products.**
- **Safety of constant quality protection & reliability**

With exclusive filter element you are sure that only MP Filtri filter elements can be used, ensuring the best cleaning level of the oil due to the use of originals filter elements.

The products identified as MPLX are protected by:

- Italian Patent n° 102014902261205
- Canadian Patent n° 2,937,258
- European Patent n° 3 124 092 B1
- US Patent n° 20170030384 A1