REAR COVERS FOR GROUP2 PUMPS AND MOTORS

INTERNAL DRAIN REAR COVER FOR PUMPS AND MOTORS

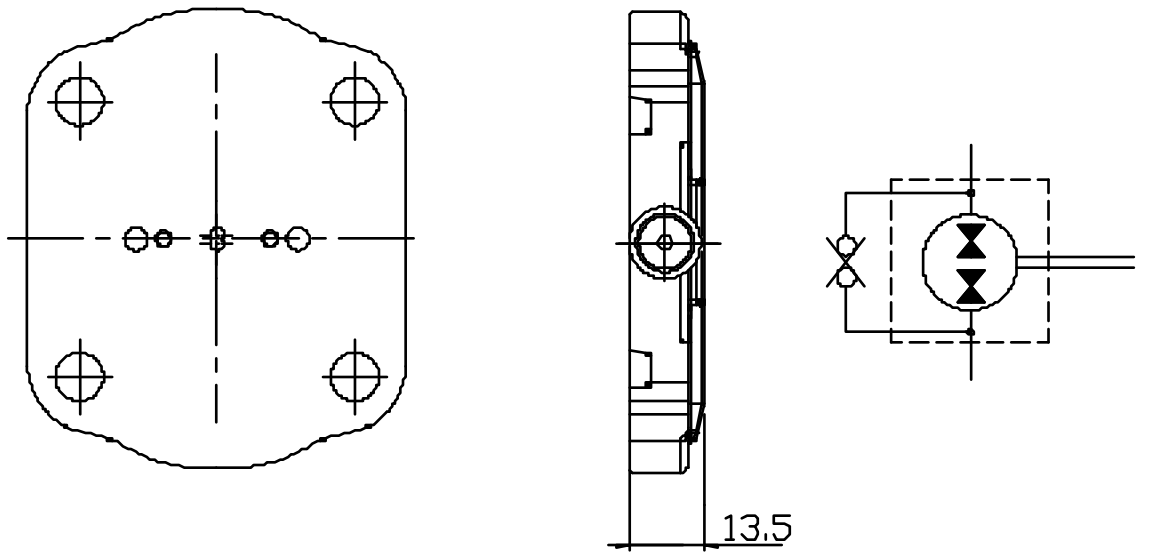

NOTE : Max back pressure 5 - 7 [bar]

EXAMPLE OF ORDERING CODE

OT200 M 08 R / G 28 P2 - DI

- OT200 M 08 R / G 28 P2 : See corrispondent reversible motors and pumps tables
- DI : Cover for INTERNAL DRAIN

REAR COVER WITH ANTICAVITATION VALVE

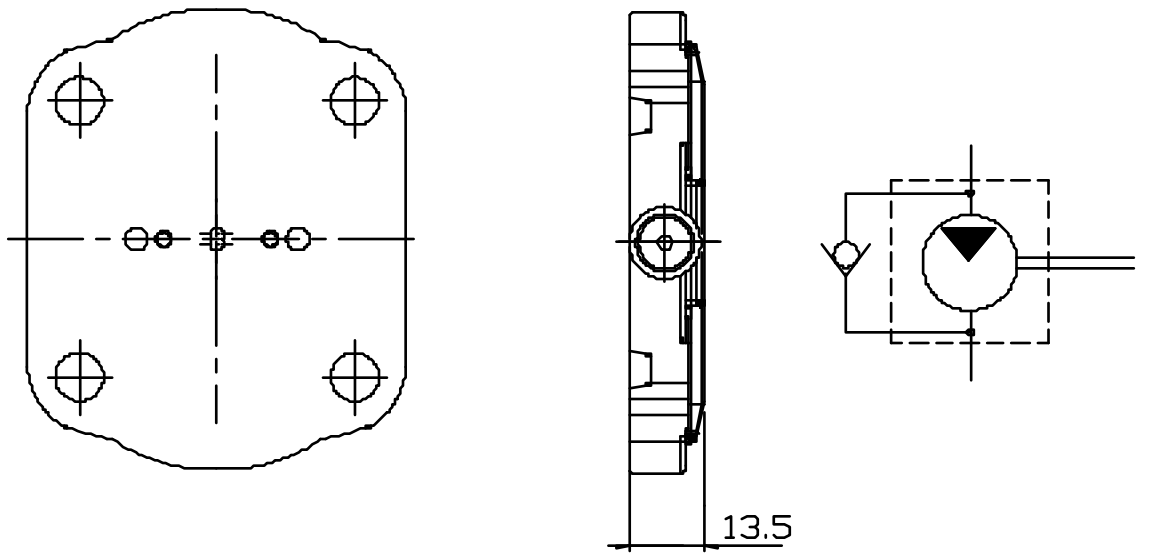

NOTE : Max back pressure 5 - 7 [bar]

EXAMPLE OF ORDERING CODE

OT200 M 08 D / G 28 P2 - VA

- OT200 M 08 D / G 28 P2 : See corrispondent UNIDIRECTIONAL motor tables
- VA : Rear cover with ANTICAVITION VALVE