SME 1 - SMF 1 - SML 1 series

Risers for breathers and filler caps installation



Technical data

Air breathers & Filler plugs

Risers for breathers and filler caps installation

SME/SMF/SML are ranges of risers for installation of the breathers and filler caps in any place on the tank.
They make the maintenance operation easy and fast.

Available features:
- SME: vertical riser made of polyamide for polyamide tanks, mainly used in the mobile machines
- SMF: sloping riser made of polyamide for polyamide tanks, mainly used in the mobile machines
- SML: sloping riser made of aluminum for metal tanks, mainly used in the industrial equipment and heavy-duty applications

Materials SME
- Body: Polyamide
- Seals: NBR
- Screws: Galvanized steel

Materials SMF
- Body: Polyamide
- Seals: NBR
- Screws: Galvanized steel

Materials SML
- Body: Aluminium
- Seals: NBR
- Screws: Galvanized steel

Temperature
From -25 °C to +100 °C

Weight
SME 0.250 kg
SMF 0.325 kg
SML 0.380 kg



Designation & Ordering code

COMPLETE ADAPTER

Configuration example: SMF1 | M | A | P01

Series	
SME1	Polyamide vertical riser
SMF1	Polyamide sloping riser
SML1	Aluminium sloping riser

Connections	
M	Metric screws
U	UNC screws

Seals	
A	NBR

Execution		Series SME1	SMF1	SML1
P01	MP Filtri standard	-	•	•
P02	Standard without logo	•	-	-

SME1

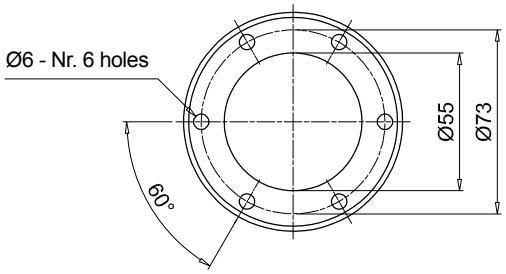

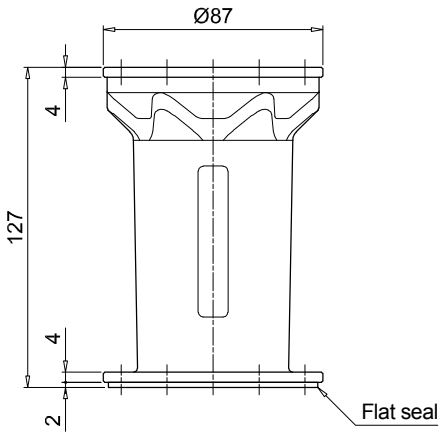

Holes on the flange

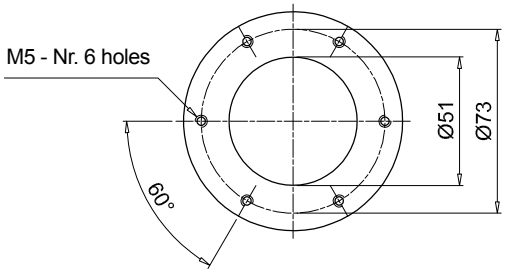

SME 1 - SMF 1 - SML 1

Dimensions

SMF1

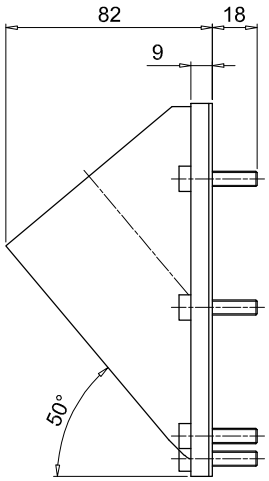

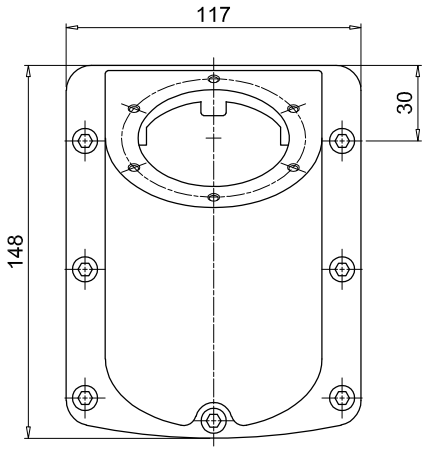

Holes on the tank

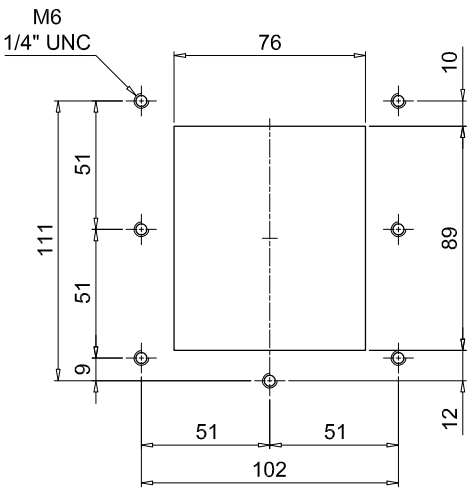

Holes on the flange

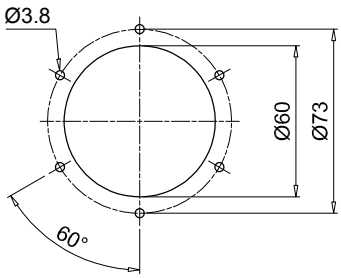

SML1

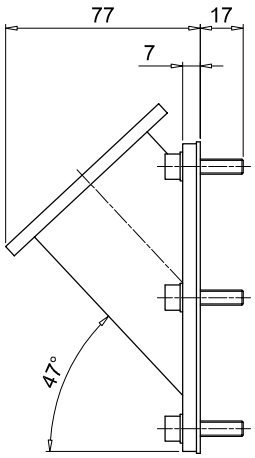

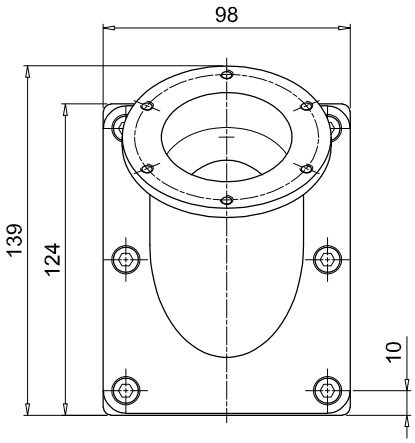

Holes on the tank

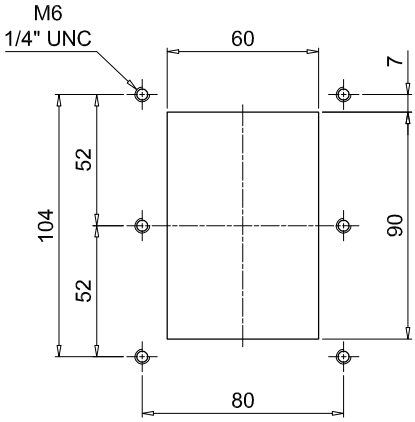

Holes on the flange

