TT 16 rail 230V AC compact Bypass

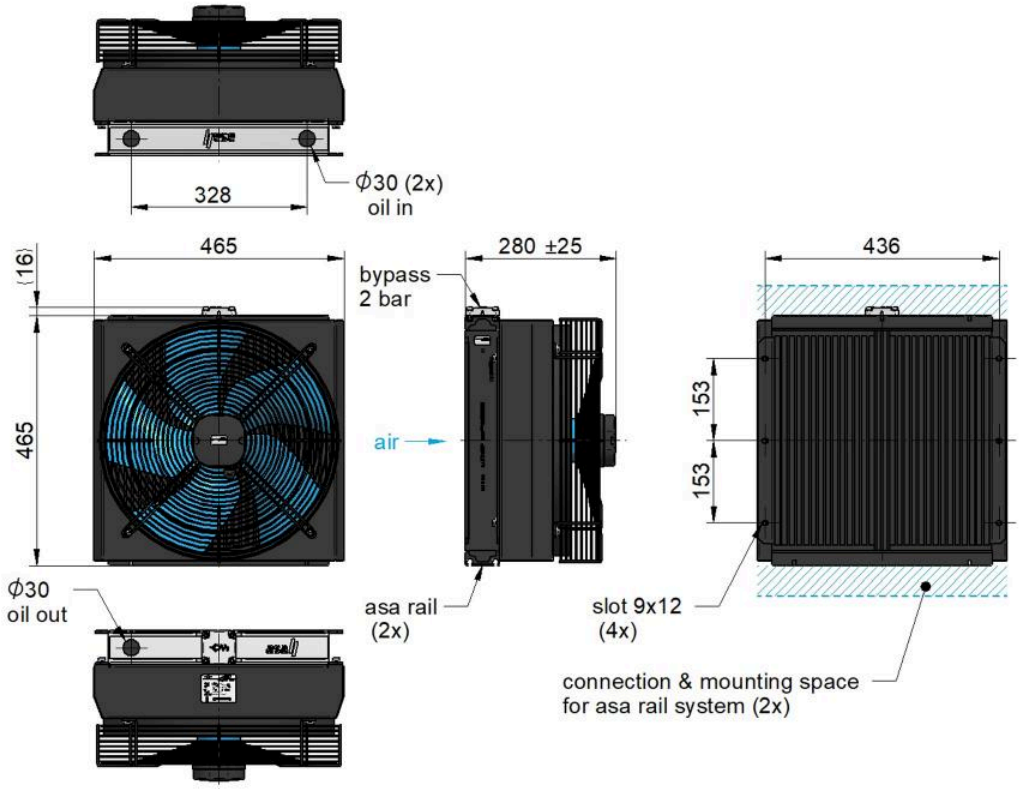

Technical data

order number	ASATT16RC4EBP	
description	TT 16 rail 230V AC compact Bypass	
motor power	0.22	kW
motor size		
current	1.1	A
protection level	IP44	
air flow	0.68	kg/s
noise level	64	dB(A)
weight	19.6	kg

TT 16 rail 230V AC compact Bypass

specific cooling performance

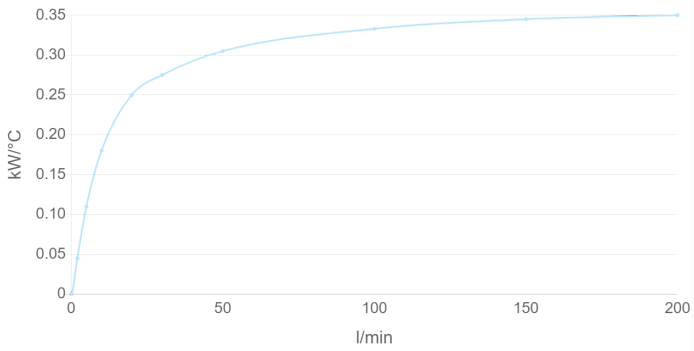

pressure drop at30cSt

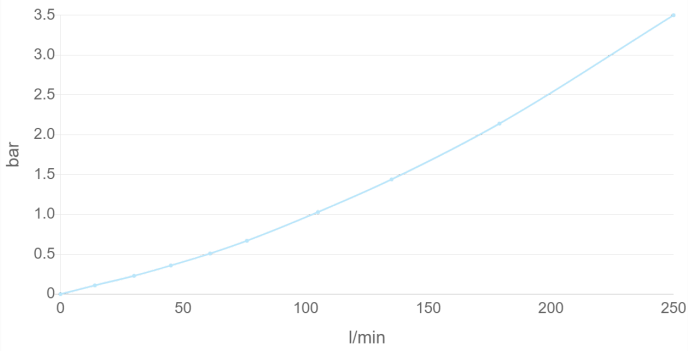

Radiator Style B

material	aluminium
working temperature range	-20°C to +80°C (oil temperature)
air fin shape	wavy
working pressure	26 bar (static)



This data sheet and the corresponding scale drawings are to be used as a general guideline and technical overview of our products. Please contact us if more exact information is needed. As we are constantly improving our products, their characteristics, dimensions and weights may also change, although we do our best to incorporate these changes continually. asa assumes no liability for any information therein, any errors, omissions, misprints, nor any direct or indirect damages, losses or costs resulting therefrom. Any cooling performances and general technical values indicated in this catalogue are measured at a test bench according to asa testing procedures or calculated, based on such tests. They represent a basis for your product selection. Due to different conditions in testing and application environments the performance may also vary by +/- 15%. All sound values are determined in accordance with ISO 9614-2, DIN EN ISO 11203 accuracy class 3 or Machinery Directive 2006/42/EG and are A-rated. At some of the performance data, possible differences to competition data are possible. The reason to that are no existing standardized testing procedures on individual subjects, e.g. for cooling performance measurements. Therefore, we recommend all products to be checked under the system operating conditions. This is also true of vibrations and mechanical stress as well as for pressure peaks and thermal stress and any other relevant factors. General tolerances according to DIN ISO 2768-vL, General tolerances for casted parts according EN ISO 8062-3 (DCTG 10). Tolerances for rubber parts are according to ISO 3302-1 (class M4-F+C). The tolerances of welding seams are defined by quality group D according to EN ISO 10042, if it is not specified on the actual scale drawing or data sheet. Any form of liability is excluded for the information included in this datasheet. All details and calculation values are checked to the best of our ability, but these do not ensure any intrinsic product properties: due to the wide-ranging possible applications, it is advised that all technical data herewith included be confirmed through testing carried out by the end-user. asa technology Produktions- und Vertriebs GmbH reserves the right to modify the product without any separate notification. This refers to both technical data and the product itself. Furthermore, it is herewith specified that the datasheet does not substitute the corresponding scale drawings, assembly and installation guidelines, nor the operating instructions.

asa technology Produktions-und
Vertriebs GmbH
Prager Strasse 280
A-1210 Wien, Austria, Europa
Tel.: +43/1/292 40 20
support@asahydraulik.com
www.asahydraulik.com