FMP series

Maximum working pressure up to 32 MPa (320 bar) - Flow rate up to 500 l/min



INSTALLATION, SERVICE AND MAINTENANCE MANUAL AND SAFETY INSTRUCTIONS

Please scan or click the QR codes to get updated electronic version of the related document.

FMP065 FMP135 FMP320

For all the QR codes: Scan or click me!

FMP GENERAL INFORMATION

Description

High Pressure filters

In-line
Maximum working pressure up to 32 MPa (320 bar)
Flow rate up to 500 l/min

FMP is a range of versatile high pressure filter for protection of sensitive components in high pressure hydraulic systems in the industrial equipment.
They are directly connected to the lines of the system through the hydraulic fittings.

Available features:

- Female threaded connections up to 1 1/2" and flanged connections up to 1 1/2", for a maximum flow rate of 500 l/min
- Fine filtration rating, to get a good cleanliness level into the system
- Bypass valve, to relieve excessive pressure drop across the filter media
- Check valve, to protect the system against reverse flow
- Low collapse filter element "N", for use with filters provided with bypass valve
- High collapse filter element "H", for use with filters not provided with bypass valve
- Low collapse filter element with external support "R", for filter element protection against the back pressure caused by the check valve in filters provided with the bypass valve
- High collapse filter element with external support "S", for filter element protection against the back pressure caused by the check valve in filters not provided with the bypass valve
- Visual, electrical and electronic differential clogging indicators

Common applications:

Delivery lines, in any high pressure industrial equipment or mobile machines

Technical data

Filter housing materials

- Head: Phosphatized cast iron
- Housing: Phosphatized steel
- Bypass valve: Brass
- Reverse Flow: Steel (only for series FMP 320)
- Check valve: Steel

Pressure

- Test pressure: 48 MPa (480 bar)
- Min. Burst pressure: 96 MPa (960 bar)
- Pulse pressure fatigue test: 1 000 000 cycles with pressure from 0 to 32 MPa (320 bar)

Bypass valve

- Opening pressure 0.6 MPa (6 bar) ±10%
- Other opening pressures on request.

Filter element features

Filter FMP		Filter element HP	
Δp Element type			
Element media	**Construction**	**Δp Series**	**Δp**
A - Microfiber	Standard	N	20 bar
	With external support	R	20 bar
	High Δp	H	210 bar
	High Δp with external support	S	210 bar
M - Wire mesh	Standard	N	20 bar
Please see ordering code tables to check element Δp series availability based on filter features.			
Flow direction through the filter element: From OUT to IN			

Seals

- Standard NBR series A
- Optional FPM series V

Temperature

From -25 °C to +110 °C

Connections

In-line Inlet/Outlet

Note

FMP filters are provided for vertical mounting

Weights [kg] and volumes [dm³]

Filter series	Weights [kg]					Volumes [dm³]				
	Length	1	2	3	4	Length	1	2	3	4
FMP 065		3.26	3.62	4.83	-		0.36	0.47	0.84	-
FMP 135		5.61	7.21	8.27	-		0.45	0.78	1.00	-
FMP 320		10.95	13.08	15.37	17.85		1.03	1.75	2.52	3.35

Flow rates [l/min]

		Filter element design - N Series					
Filter series	Length	A03	A06	A10	A16	A25	M25
FMP 065	1	23	30	48	54	72	105
	2	31	45	60	65	82	106
	3	52	60	80	84	94	108
FMP 135	1	69	73	120	129	171	201
	2	110	117	149	152	211	232
	3	151	152	192	195	212	233
FMP 320	1	130	144	244	296	361	477
	2	267	291	417	438	492	509
	3	348	390	476	493	503	519
	4	389	415	483	502	525	534

Maximum flow rate for a complete pressure filter with a pressure drop Δp = 1.5 bar.
The reference fluid has a kinematic viscosity of 30 mm^2/s (cSt) and a density of 0.86 kg/dm^3.
For different pressure drop or fluid viscosity we recommend to use our selection software available on www.mpfiltri.com.
You can also calculate the right size using the formulas present on the FILTER SIZING paragraph at the beginning of the full catalogue or at the beginning of the filter family brochure.
Please, contact our Sales Department for further additional information.

Hydraulic diagram

Filter series	Style S - E	Style B - C	Style T	Style D
FMP 065	•	•	•	•
FMP 135	•	•	•	•
FMP 320	•	•	•	•

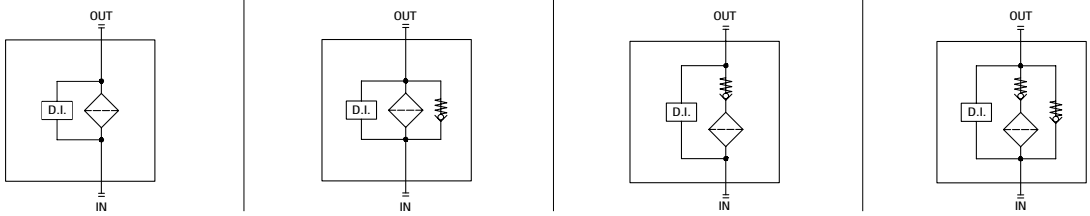

Pressure drop

Filter housings Δp pressure drop

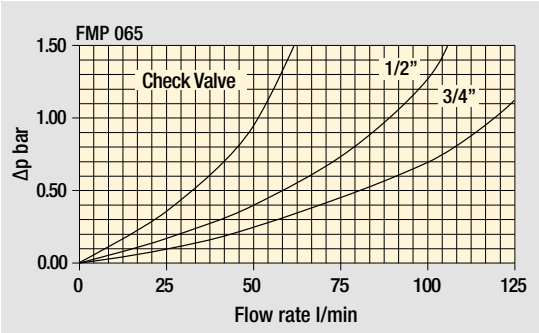

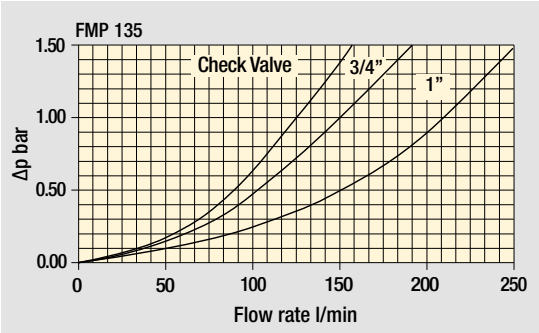

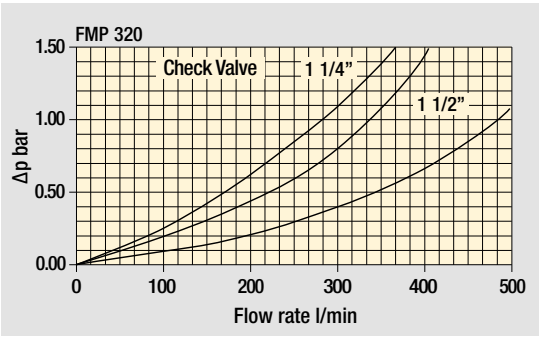

Bypass valve pressure drop

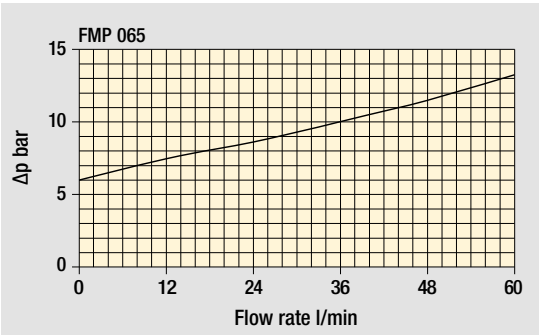

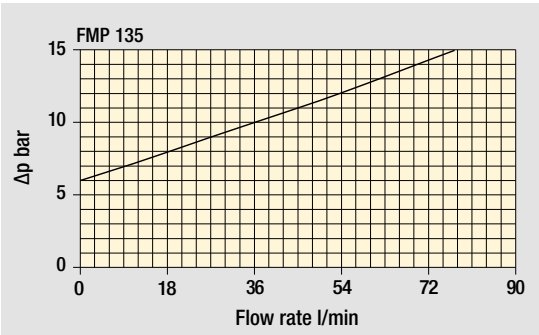

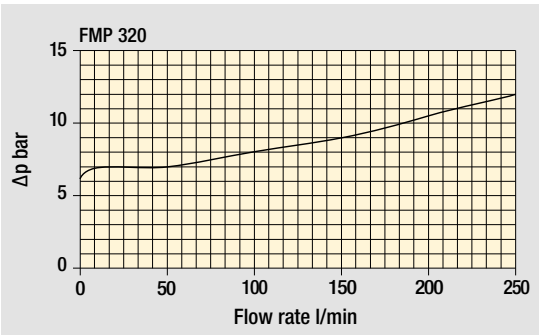

Valves

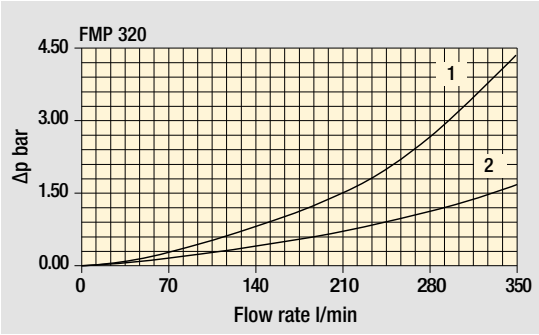

Filter housing with check valve

1 - Reverse flow
2 - In filter direction

The curves are plotted using mineral oil with density of 0.86 kg/dm^3 in compliance with ISO 3968. Δp varies proportionally with density.

Designation & Ordering code

COMPLETE FILTER

Configuration example: FMP065 | 3 | T | A | G1 | M25 | S | P01

Series and size

FMP065 | **FMP135** | **FMP320**

Length	FMP065	FMP135	FMP320
1	•	•	•
2	•	•	•
3	•	•	•
4	-	-	•

Valves

S	Without bypass	**C**	With bypass 6 bar, plug on the opposite side
E	Without bypass, plug on the opposite side	**T**	With check valve, without bypass
B	With bypass 6 bar	**D**	With check valve, with bypass

Seals

A	NBR	**V**	FPM

Connections	FMP065	FMP135	FMP320
G1	G 1/2"	G 3/4"	G 1 1/4"
G2	G 3/4"	G 1"	G 1 1/2"
G3	1/2" NPT	3/4" NPT	1 1/4" NPT
G4	3/4" NPT	1" NPT	1 1/2" NPT
G5	SAE 8 - 3/4" - 16 UNF	SAE 12 - 1 1/16" - 12 UN	SAE 20 - 1 5/8" - 12 UN
G6	SAE 12 - 1 1/16" - 12 UN	SAE 16 - 1 5/16" - 12 UN	SAE 24 - 1 7/8" - 12 UN
F1	-	3/4" SAE 3000 psi/M	1 1/4" SAE 3000 psi/M
F2	-	1" SAE 3000 psi/M	1 1/2" SAE 3000 psi/M
F3	-	3/4" SAE 3000 psi/UNC	1 1/4" SAE 3000 psi/UNC
F4	-	1" SAE 3000 psi/UNC	1 1/2" SAE 3000 psi/UNC

Filtration rating (filter media)

A03	Inorganic microfiber	3 µm
A06	Inorganic microfiber	6 µm
A10	Inorganic microfiber	10 µm
A16	Inorganic microfiber	16 µm
A25	Inorganic microfiber	25 µm
M25	Wire mesh	25 µm

Element Δp		Valves S	E	B	C	T	D
N	20 bar	-	-	•	•	-	-
R	20 bar	-	-	-	-	-	•
H	210 bar	•	•	-	-	-	-
S	210 bar	-	-	-	-	•	-

Execution		Filter length 1	2	3	4
P01	MP Filtri standard	•	•	•	•
P02	Maintenance from the bottom of the housing	-	-	-	•
Pxx	Customized	-	-	-	-

FILTER ELEMENT

Configuration example: HP065 | 3 | M25 | A | S | P01

Element series and size

HP065 | **HP135** | **HP320**

Element length	HP065	HP135	HP320
1	•	•	•
2	•	•	•
3	•	•	•
4	-	-	•

Filtration rating (filter media)

A03	Inorganic microfiber	3 µm
A06	Inorganic microfiber	6 µm
A10	Inorganic microfiber	10 µm
A16	Inorganic microfiber	16 µm
A25	Inorganic microfiber	25 µm
M25	Wire mesh	25 µm

Seals

A	NBR
V	FPM

Element Δp

N	20 bar
R	20 bar
H	210 bar
S	210 bar

Execution

P01	MP Filtri standard
Pxx	Customized

CLOGGING INDICATORS

See page 786

DEA	Electrical differential pressure indicator	**DTA**	Electronic differential pressure indicator
DEM	Electrical differential pressure indicator	**DTI**	I-O Link electronic differential pressure indicator
DEU	Electrical differential pressure indicator	**DVA**	Visual differential pressure indicator
DLA	Electrical / visual differential pressure indicator	**DVM**	Visual differential pressure indicator
DLE	Electrical / visual differential pressure indicator		

PLUGS

See page 807

T2 Plug (not included)

FMP065

Filter length	H [mm]
1	169
2	200
3	302

Connections	R
G1-G2	M8
G3-G4-G5-G6	5/16" UNC

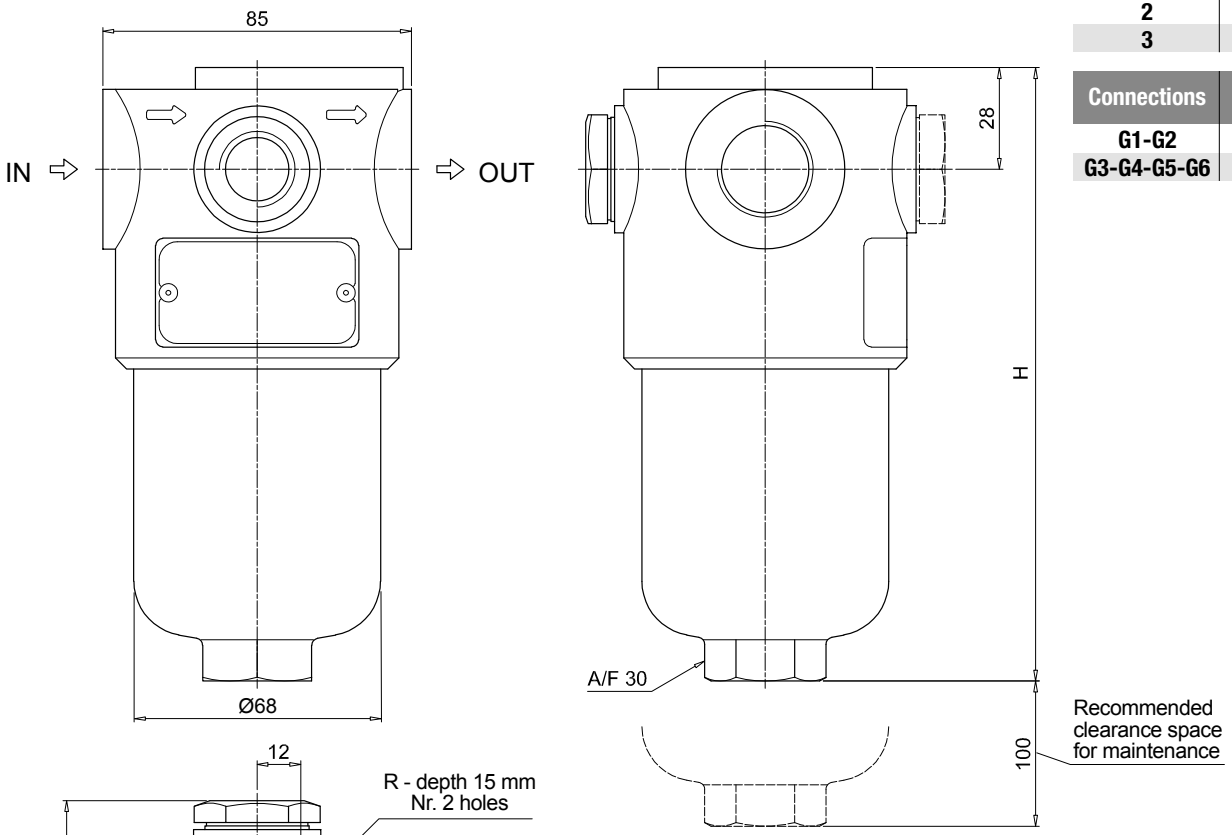

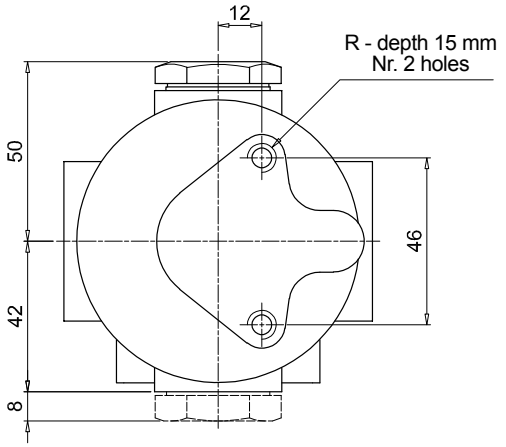

Valves S - B - T - D

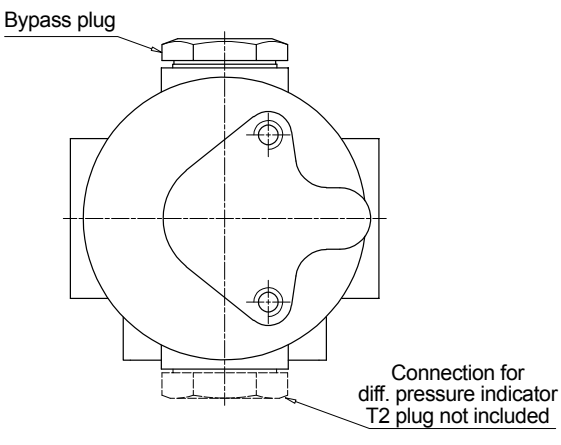

Valves E - C

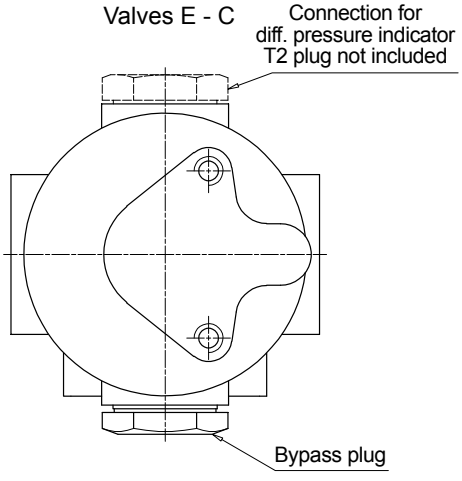

Order number for spare parts

FMP 065 - 135 - 320

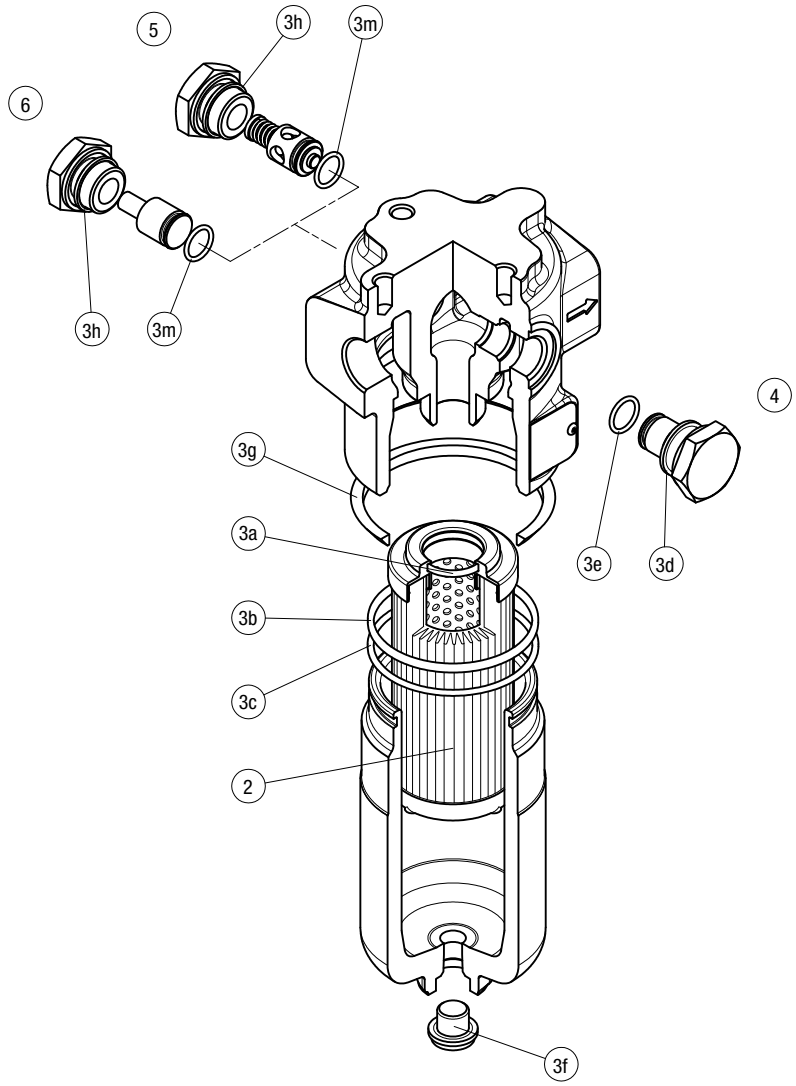

Item:	Q.ty: 1 pc. 2	Q.ty: 1 pc. 3 (3a ÷ 3m)		Q.ty: 1 pc. 4		Q.ty: 1 pc. 5		Q.ty: 1 pc. 6	
Filter series	**Filter element**	**Seal Kit code number NBR**	**FPM**	**Indicator connection plug NBR**	**FPM**	**Bypass assembly NBR**	**FPM**	**Non-bypass assembly NBR**	**FPM**
FMP 065	See order table	02050267	02050278	T2H	T2V	02001312	02001385	02001314	02001386
FMP 135		02050293	02050294			02001312	02001385	02001314	02001386
FMP 320		02050274	02050285			02001396	02001397	02001398	02001399