HYDRAULIC MOTORS MM



CONTENTS

Specification data 5
Function diagrams ..... 6÷8
Dimensions and mounting ... 9÷10
Shaft extensions 11
Permissible shaft loads 11
Order code 12

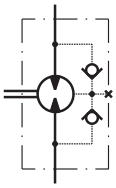

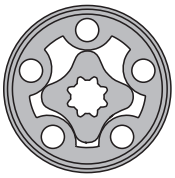

APPLICATION

» Conveyors
» Textile machines
» Mining machinery
» Machine tools
» Ventilators
» Construction plant equipment and access platforms etc.

Pressure Settings at Flow
Q=2 lpm [.53 GPM], 32 mm²/s [150 SUS], 50°C [122°F]

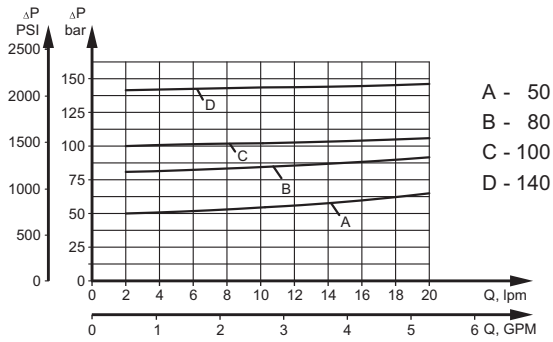

A - 50 bar [725 PSI]
B - 80 bar [1160 PSI]
C - 100 bar [1450 PSI]
D - 140 bar [2030 PSI]

OPTIONS

» Model - Spool valve, gerotor
» With or without flange
» Side and rear ports
» Series with pressure valve(s)
» Shafts - straight and splined
» Metric and BSPP ports
» Speed sensoring;
» Other special features

MMP Series with Integrated Internal Crossover Relief Valve
A→B,Δp=100 or 50 bar [1450 or 725 PSI]

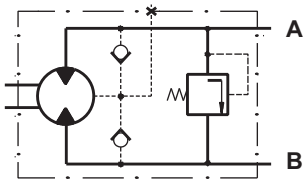

MMP Series with Integrated Internal Crossover Relief Valve
B→A,Δp=100 or 50 bar [1450 or 725 PSI]

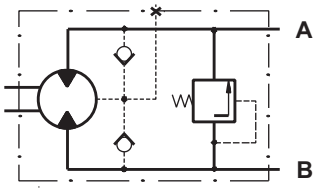

Pressure Losses

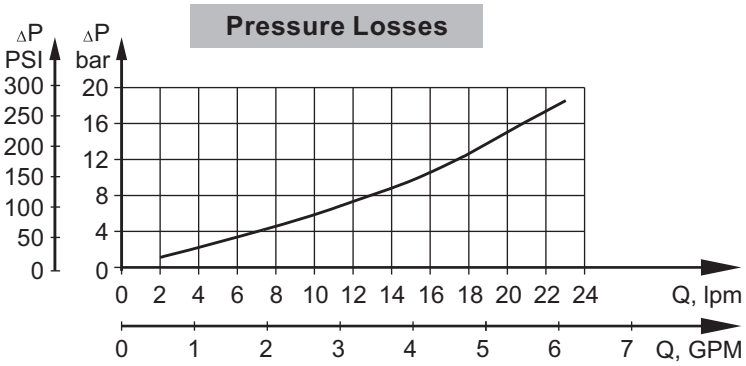

MMD Series with Integrated Internal Crossover Relief Valves
A←→B,Δp=100 or 50 bar [1450 or 725 PSI]

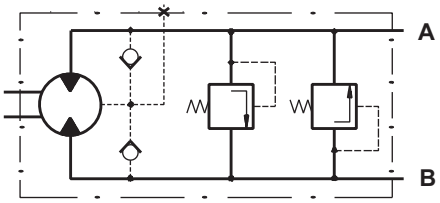

GENERAL

Max. Displacement,	cm^3/rev [in^3/rev]	50 [3.05]
Max. Speed,	[RPM]	2440
Max. Torque,	daNm [lb-in]	cont.: 4,5 [398] int.: 5,8 [513]
Max. Output,	kW [HP]	3,2 [4.3]
Max. Pressure Drop,	bar [PSI]	cont.: 105 [1500] int.: 140 [2030]
Max. Oil Flow,	lpm [GPM]	25 [6.6]
Min. Speed,	[RPM]	20
Pressure fluid		Mineral based- HLP(DIN 51524) or HM(ISO 6743/4)
Temperature range,	°C [°F]	-40÷140 [-40÷284]
Optimal Viscosity range,	mm^2/s [SUS]	20÷75 [98÷347]
Filtration		ISO code: 18/16/13 According to ISO 4406-1999

M+S HYDRAULIC

SPECIFICATION DATA

Type		MM 8	MM 12.5	MM 20	MM 32	MM 40	MM 50
Displacement, cm^3/rev [in^3/rev]		8,2 [.50]	12,5 [.77]	19,9 [1.22]	31,6 [1.93]	39,8 [2.43]	50 [3.08]
Max. Speed, [RPM]	Cont.	1950	1550	1000	630	500	400
	Int.*	2450	1940	1250	800	630	500
Max. Torque, daNm [lb-in]	Cont.	1,1 [95]	1,6 [140]	2,5 [220]	4,0 [350]	4,5 [400]	4,6 [410]
	Int.*	1,5 [135]	2,3 [200]	3,5 [310]	5,7 [500]	7,0 [620]	8,8 [780]
	Peak**	2,1 [187]	3,3 [293]	5,1 [453]	6,4 [568]	8,2 [725]	10,0 [885]
Max. Output, kW [HP]	Cont.	1,8 [2.4]	2,4 [3.2]	2,4 [3.2]	2,4 [3.2]	2,2 [3.0]	1,8 [2.4]
	Int.*	2,6 [3.5]	3,2 [4.3]	3,2 [4.3]	3,2 [4.3]	3,2 [4.3]	3,2 [4.3]
Max. Pressure Drop, bar [PSI]	Cont.	100 [1450]	100 [1450]	100 [1450]	100 [1450]	90 [1310]	70 [1020]
	Int.*	140 [2030]	140 [2030]	140 [2030]	140 [2030]	140 [2030]	140 [2030]
	Peak**	200 [2900]	200 [2900]	200 [2900]	160 [2320]	160 [2320]	160 [2320]
Max. Oil Flow, lpm [GPM]	Cont.	16 [4.2]	20 [5.3]	20 [5.3]	20 [5.3]	20 [5.3]	20 [5.3]
	Int.*	20 [5.3]	25 [6.6]	25 [6.6]	25 [6.6]	25 [6.6]	25 [6.6]
Max. Inlet Pressure, bar [PSI]	Cont.	140 [2030]	140 [2030]	140 [2030]	140 [2030]	140 [2030]	140 [2030]
	Int.*	175 [2540]	175 [2540]	175 [2540]	175 [2540]	175 [2540]	175 [2540]
	Peak**	225 [3260]	225 [3260]	225 [3260]	225 [3260]	225 [3260]	225 [3260]
Max. Return Pressure without Drain Line or Max. Pressure in Drain Line, bar [PSI]	Cont. 0-100 RPM	140 [2030]	140 [2030]	140 [2030]	140 [2030]	140 [2030]	140 [2030]
	Cont. 100-400 RPM	105 [1500]	105 [1500]	105 [1500]	105 [1500]	105 [1500]	105 [1500]
	Cont. 400-800 RPM	50 [725]	50 [725]	50 [725]	50 [725]	50 [725]	50 [725]
	Cont. >800 RPM	20 [290]	20 [290]	20 [290]	-	-	-
	Int.* 0-max. RPM	140 [2030]	140 [2030]	140 [2030]	140 [2030]	140 [2030]	140 [2030]
Max. Return Pressure with Drain Line, bar [PSI]	Cont.	140 [2030]	140 [2030]	140 [2030]	140 [2030]	140 [2030]	140 [2030]
	Int.*	175 [2540]	175 [2540]	175 [2540]	175 [2540]	175 [2540]	175 [2540]
	Peak**	225 [3260]	225 [3260]	225 [3260]	225 [3260]	225 [3260]	225 [3260]
Max. Starting Pressure with Unloaded Shaft, bar [PSI]		4 [60]	4 [60]	4 [60]	4 [60]	4 [60]	4 [60]
Min. Starting Torque, daNm [lb-in]	At max. press. drop Cont.	0,7 [60]	1,2 [105]	2,1 [185]	3,4 [300]	3,8 [335]	4,1 [365]
	At max. press. drop Int.*	1,0 [90]	1,7 [150]	2,9 [255]	4,8 [425]	6,2 [550]	7,9 [700]
Min. Speed*, [RPM]**		50	40	30	30	25	20
Weight, kg [lb] For "F" flange: +0,200 [.441]	MM	1,9 [4.2]	2,0 [4.41]	2,1 [4.63]	2,2 [4.85]	2,3 [5.07]	2,5 [5.51]
	MMF(S)	2,0 [4.41]	2,1 [4.63]	2,2 [4.85]	2,3 [5.07]	2,4 [5.29]	2,6 [5.73]
	MMP	2,2 [4.85]	2,3 [5.07]	2,4 [5.29]	2,5 [5.51]	2,6 [5.73]	2,8 [6.17]
	MMD	2,6 [5.73]	2,7 [5.95]	2,8 [6.17]	2,9 [6.39]	3,0 [6.61]	3,2 [7.05]

* Intermittent operation: the permissible values may occur for max. 10% of every minute.
** Peak load: the permissible values may occur for max. 1% of every minute.
*** For speeds lower than given, consult factory or your regional manager.

1. Intermittent speed and intermittent pressure must not occur simultaneously.
2. Recommended filtration is per ISO cleanliness code 20/16. A nominal filtration of 25 micron or better.
3. Recommend using a premium quality, anti-wear type mineral based hydraulic oil HLP(DIN51524) or HM (ISO 6743/4). If using synthetic fluids consult the factory for alternative seal materials.
4. Recommended minimum oil viscosity 13 mm^2/s [70 SUS] at 50°C [122°F].
5. Recommended maximum system operating temperature is 82°C [180°F].
6. To assure optimum motor life fill with fluid prior to loading and run at moderate load and speed for 10-15 minutes.

FUNCTION DIAGRAMS

MM 8

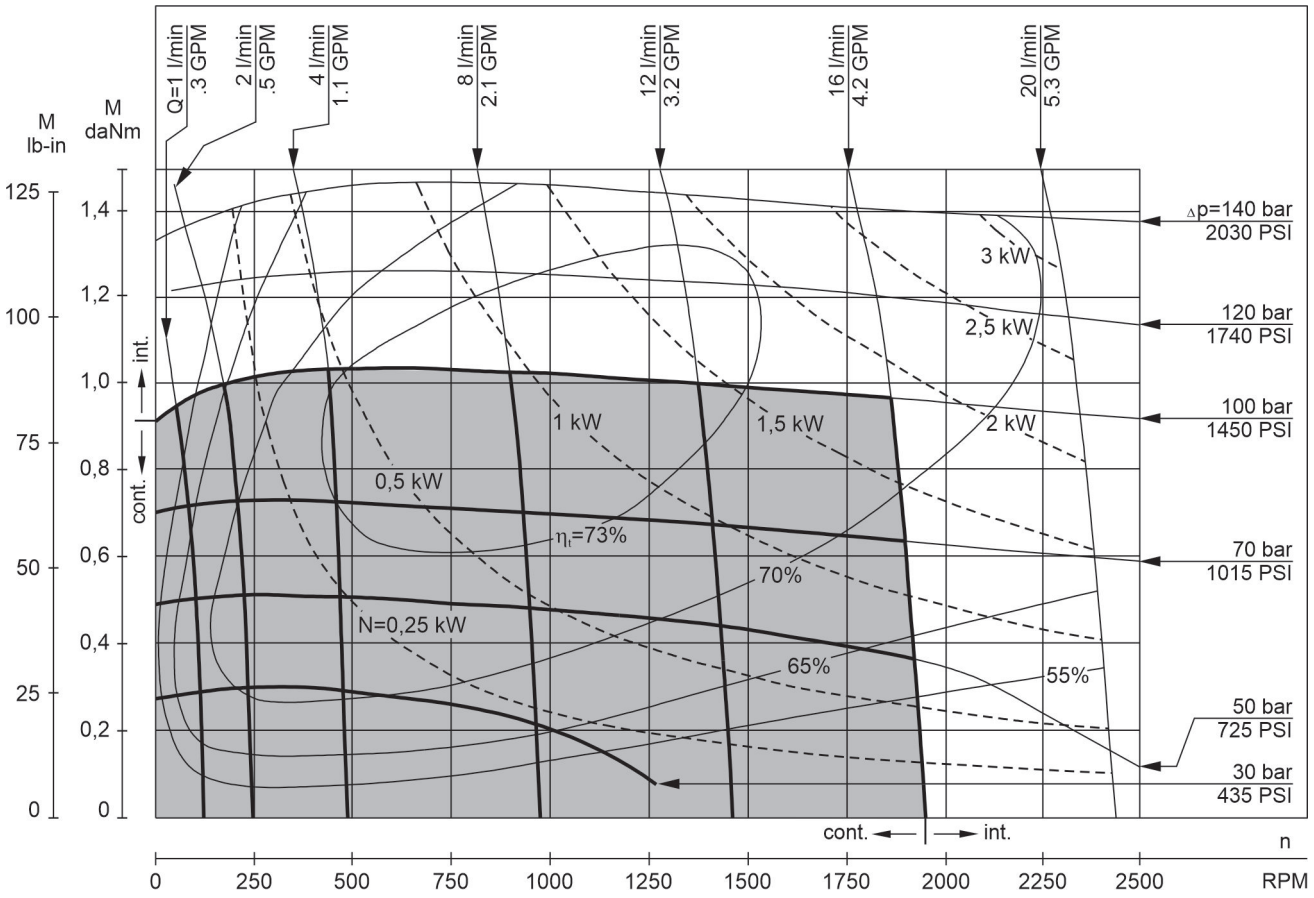

MM 12,5

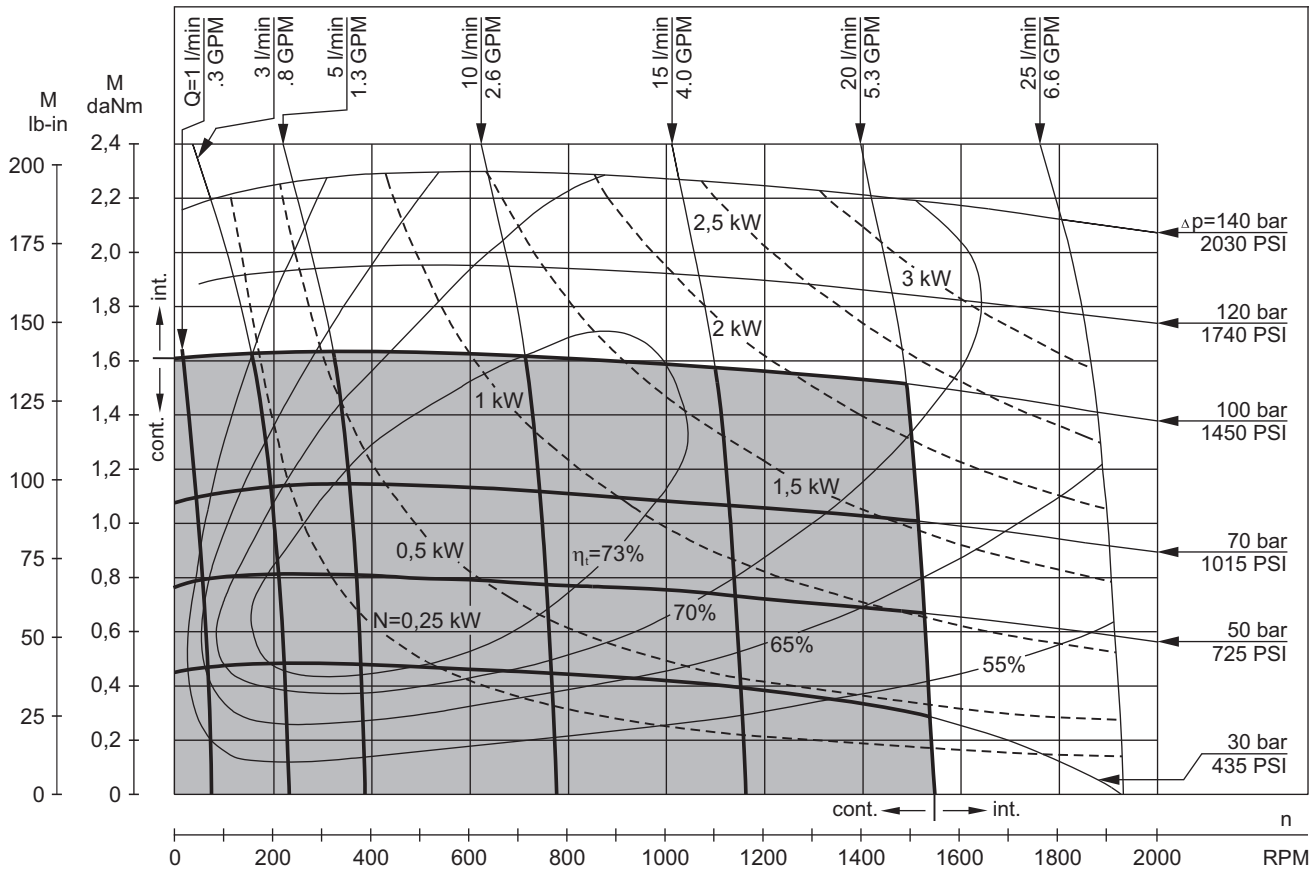

The function diagrams data is for average performance of randomly selected motors at back pressure 5÷10 bar [72.5 PSI÷145 PSI] and oil with viscosity of 32 mm²/s [150 SUS] at 50°C [122°F].

DIMENSIONS and MOUNTING DATA
MM, MMS, MMP, MMD

Three Bolts Mount

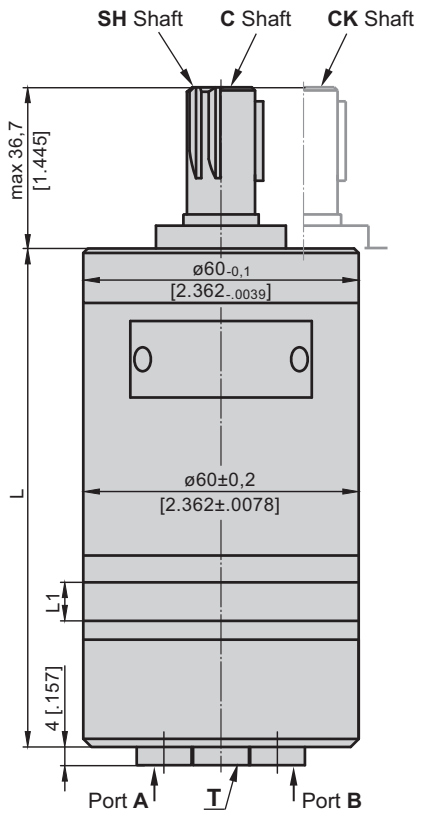

Shaft Dim. See Page 11

Flange Dim. See Page 10

Port Dim. See Page 10

Rear Ports

F Oval Mount (2 Holes)

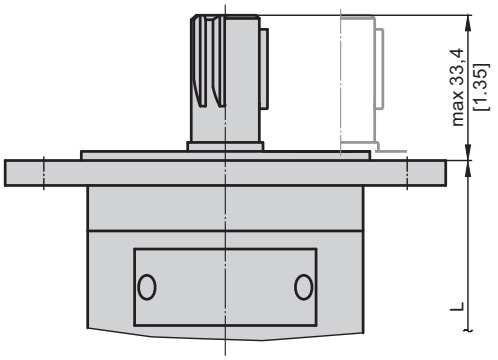

Standard Rotation
Viewed from Shaft End
Port **A** Pressurized - **CW**
Port **B** Pressurized - **CCW**

Reverse Rotation
Viewed from Shaft End
Port **A** Pressurized - **CCW**
Port **B** Pressurized - **CW**

S Side Ports

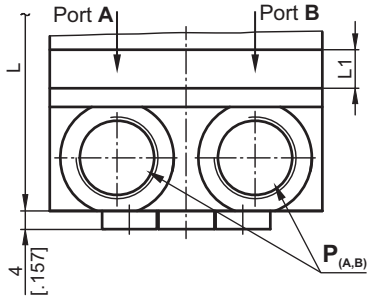

P Side Ports

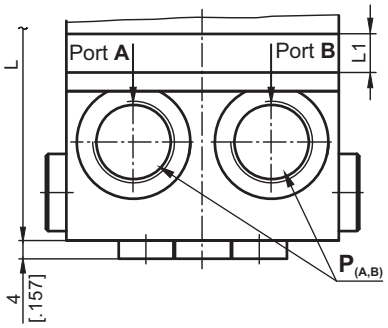

D Side Ports

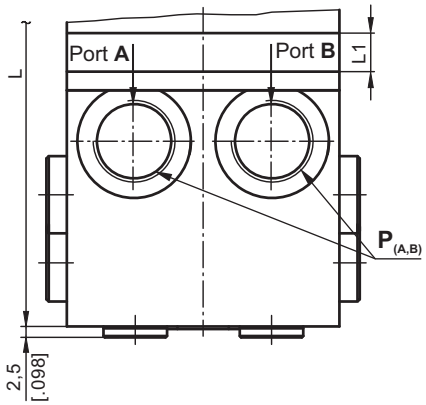

P$_{(A,B)}$: 2xG3/8 or 2xM18x1,5 - 12 mm [.47 in] depth
T : G1/8 or M10x1 - 10 mm [.39 in] depth

Type	L, mm [in]	Type	L, mm [in]	L_1, mm [in]
MM 8	105 [4.134]	MMS 8	106,4 [4.189]	3,5 [.138]
MM 12,5	107 [4.213]	MMS 12,5	108,4 [4.268]	5,5 [.217]
MM 20	110 [4.331]	MMS 20	111,4 [4.386]	8,5 [.335]
MM 32	115 [4.528]	MMS 32	116,4 [4.583]	13,5 [.531]
MM 40	118,5 [4.665]	MMS 40	119,9 [4.720]	17 [.669]
MM 50	122,5 [4.823]	MMS 50	123,9 [4.878]	21 [.827]

Type	L, mm [in]	Type	L, mm [in]	L_1, mm [in]
MMP 8	116 [4.567]	MMD 8	135,1 [5.319]	3,5 [.138]
MMP 12,5	118 [4.646]	MMD 12,5	137,1 [5.398]	5,5 [.217]
MMP 20	121 [4.764]	MMD 20	140,1 [5.516]	8,5 [.335]
MMP 32	126 [4.961]	MMD 32	145,1 [5.713]	13,5 [.531]
MMP 40	129,5 [5.098]	MMD 40	148,6 [5.850]	17 [.669]
MMP 50	133,5 [5.256]	MMD 50	152,6 [6.008]	21 [.827]

For “F” Flange +3,5 mm

mm [in]

MOUNTING

Three Bolts Mount

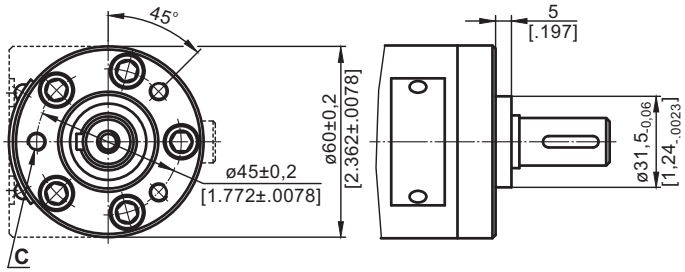

F Oval Mount (2 Holes)

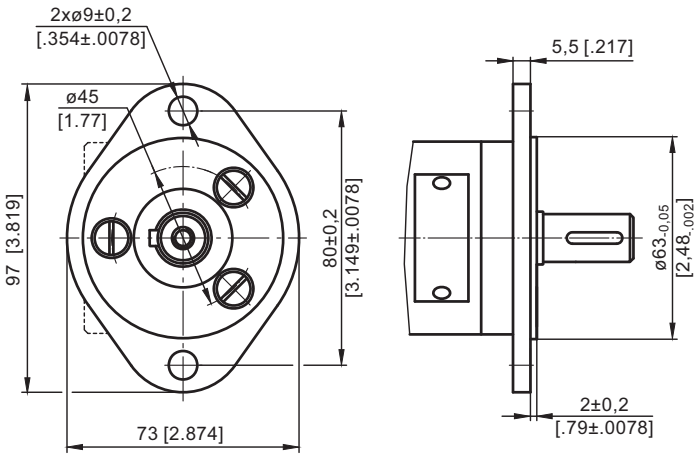

PORTS

Rear Ports

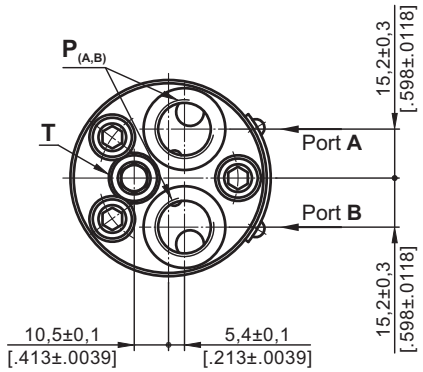

S Side Ports

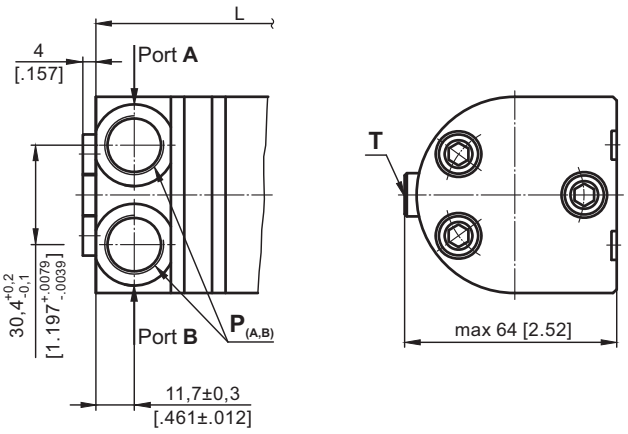

P Side Ports with Single Crossover Relief Valve

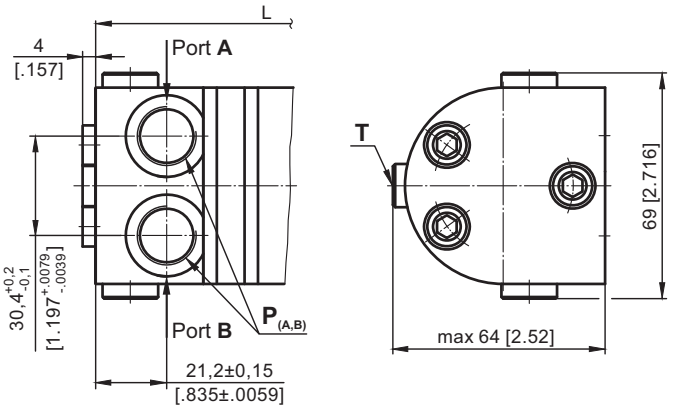

D Side Ports with Dual Crossover Relief Valve

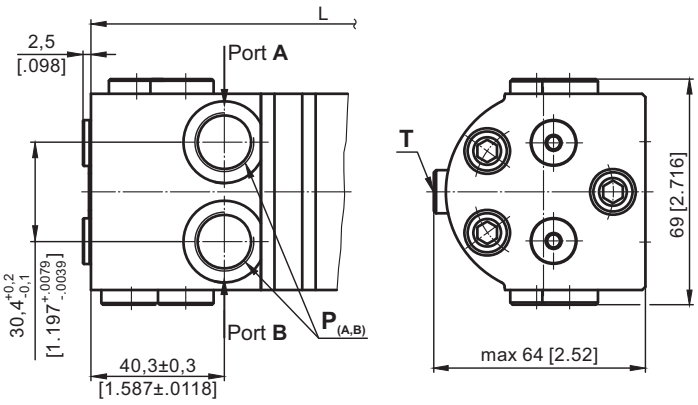

mm [in]

Standard Rotation
Viewed from Shaft End
Port **A** Pressurized - **CW**
Port **B** Pressurized - **CCW**

Reverse Rotation
Viewed from Shaft End
Port **A** Pressurized - **CCW**
Port **B** Pressurized - **CW**

C : 3xM6 - 12 mm [.47 in] depth
P(A,B) : 2xG3/8 or 2xM18x1,5 - 12 mm [.47 in] depth
T : G1/8 or M10x1 - 10 mm [.39 in] depth

SHAFT EXTENSIONS

C - ø16 straight, Parallel key 5x5x16 DIN 6885
Max. Torque 3,9 daNm [345 lb-in]

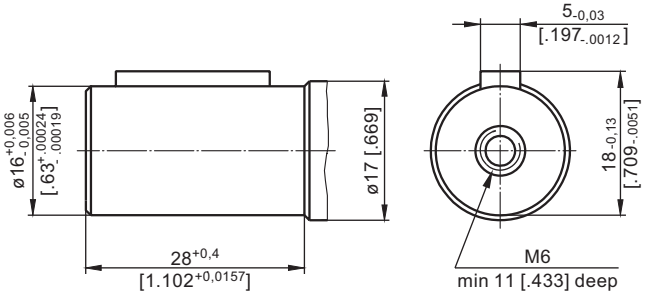

CK - ø14 straight, Parallel key 5x5x16 DIN 6885
Max. Torque 3 daNm [265 lb-in]

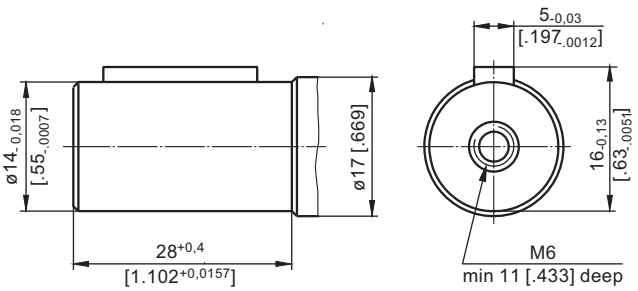

SH - ø16,5 splined, B17x14 DIN 5482
Max. Torque 4,4 daNm [390 lb-in]

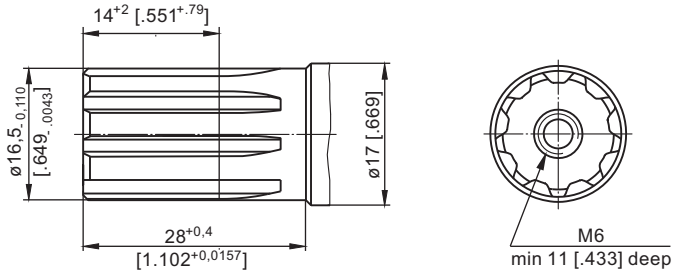

mm [in]

PERMISSIBLE SHAFT LOAD

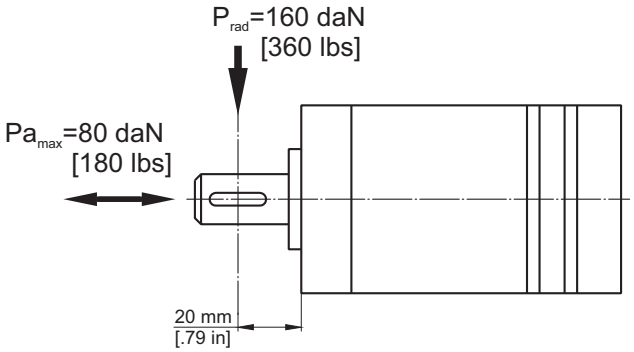

The permissible radial shaft load [Prad] is calculated from the distance [L] between the point of load application and the mounting surface:

$$\mathbf{P_{rad}} = \frac{600}{n} X \frac{13040}{61{,}5+L}\ , [daN]$$

[L in mm; L≤ 80 mm]

$$\mathbf{P_{rad}} = \frac{600}{n} X \frac{1155}{2.42 + L}\ , [lbs]$$

[L in inch; L≤ 3.15 in]

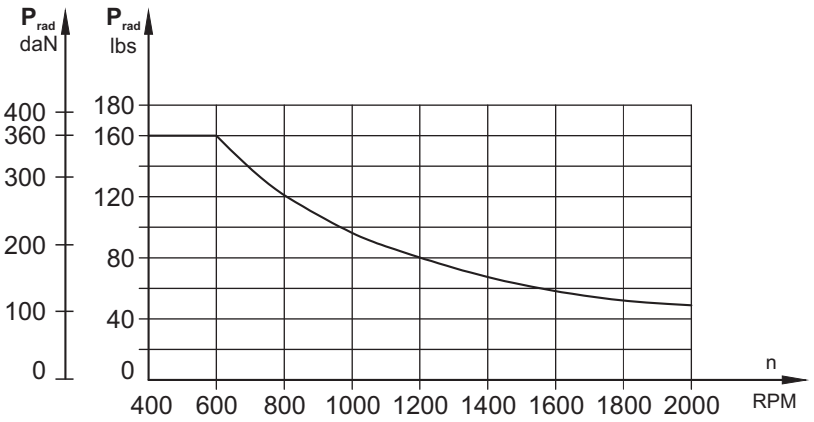

The drawing shows the permissible radial load when L=20 mm [.79 in].

If the calculated shaft load exceeds the permissible, a flexible coupling must be used.

ORDER CODE

	1	2	3	4	5	6	7	8	9	10
M M										

Pos.1 - Adjustment Option

omit - without valve

P - Side ports with single crossover relief valve

D - Side ports with dual crossover relief valve

Pos.2 - Mounting Flange

omit - Three bolts mount valve

F - Oval mount, two holes

Pos.3 - Port type (not valid for **P** and **D** version)

omit - Rear ports

S - Side ports

Pos.4 - Displacement code

8 - 8,2 cm^3/rev [.5 in^3/rev]

12.5 - 12,9 cm^3/rev [.79 in^3/rev]

20 - 20,0 cm^3/rev [1.22 in^3/rev]

32 - 31,8 cm^3/rev [1.93 in^3/rev]

40 - 40,0 cm^3/rev [2.44 in^3/rev]

50 - 50,0 cm^3/rev [3.05 in^3/rev]

Pos. 5 - Shaft Extensions*

C - ø16 straight, Parallel key A5x5x16 DIN6885

VC - ø16 straight, Parallel key A5x5x16 DIN6885 with corrosion resistant protection

CK - ø14 straight, Parallel key 5x5x16 DIN6885

SH - ø16,5 splined, B17x14 DIN 5482

Pos. 6 - Ports

omit - BSPP (ISO 228)

M - Metric (ISO 262)

Pos. 7 - Line to control** (see page 4)

/L - B→A (left running)

/R - A→B (right running)

Pos. 8 - Valve Rated Pressure***

/50 - Δp= 50 bar [725 PSI]

/80 - Δp= 80 bar [1160 PSI]

/100 - Δp=100 bar [1450 PSI]

/140 - Δp=140 bar [2030 PSI]

Pos. 9 - Additional Options (see page 125)

Pos.10 - Design Series

omit - Factory specified

NOTES: * The permissible output torque for shafts must not be exceeded!
** For **P** option useful only.
*** For **P** and **D** option useful only.

⚠ **MMP** and **MMD** are available with new crossover relief valves with improved characteristics. The valves are set in a wide pressure range: from 50 bar [725 PSI] to 140 bar [2030 PSI]. For more information about MMP and MMD please contact with "M+S Hydraulic".

The Valve pressure setting must be at flow rate of 2 lpm [.53 GPM].

The hydraulic motors are mangano - phosphatized as standard.

F - FLANGE (2 Holes)

Order No for Flange:48443 014 00

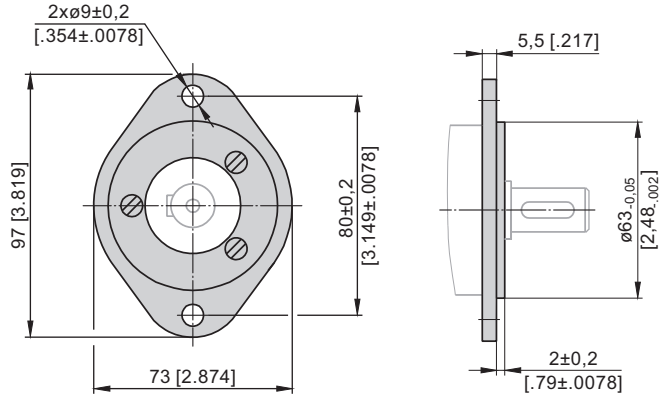

F Flange is mounted to the motor with 3 screws - M6x14. Tightening Torque: 5-6 Nm [44-53 lb-in].