HSE inlet sections

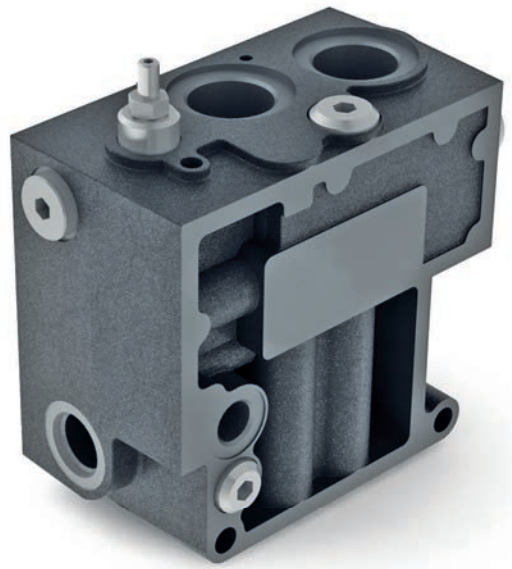

Features

- Hydraulic features: see page B-8.
- Connections: P, T: 3/4” BSPP or 1 1/16” - 12UN-2B
- Connessione Ls: 1/4” BSPP or 7/16” - 20UNF-2B
- Made in cast iron

HSE for purely mechanically activated valves

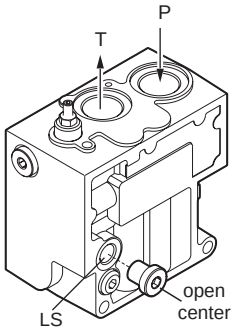

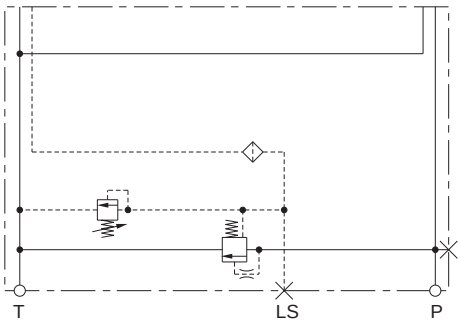

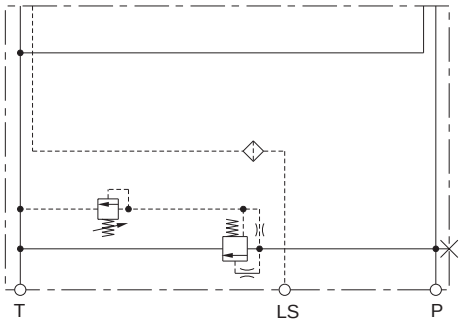

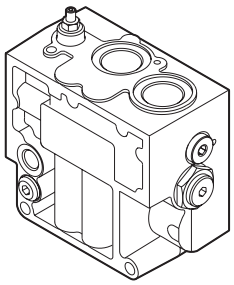

Open center circuit for fixed displacement pumps

Code	
BSPP	UN - UNF
HSE0004101010	HSE0004101020

Closed center circuit for load sensing pumps

Code	
BSPP	UN - UNF
HSE0004101110	HSE0004101120

HSE inlet sections

For electrically activated valves.With pilot oil supply Lp.

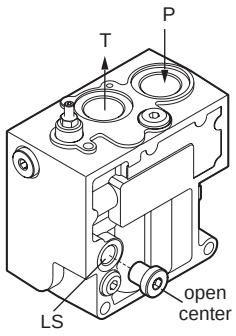

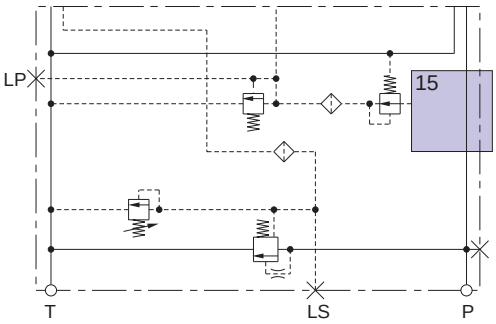

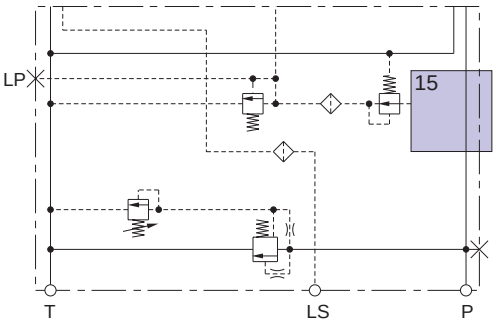

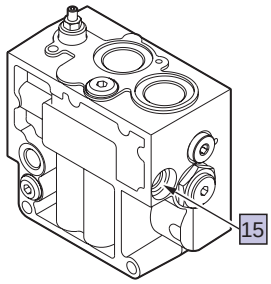

Open center circuit for fixed displacement pumps

Code		LP(*)	
BSPP	UN - UNF	bar	psi
HSE0004101050	HSE0004101060	22	319
HSE0004101229	HSE0004101231	30	435
HSE0004101230	HSE0004101232	36	522

Closed center circuit for load sensing pumps

Code		LP(*)	
BSPP	UN - UNF	bar	psi
HSE0004101130	HSE0004101140	22	319
HSE0004101251	HSE0004101253	30	435
HSE0004101252	HSE0004101254	36	522

For purely mechanically activated valves.
Prearranged for pump unloading valve, HSER

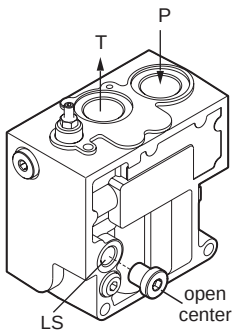

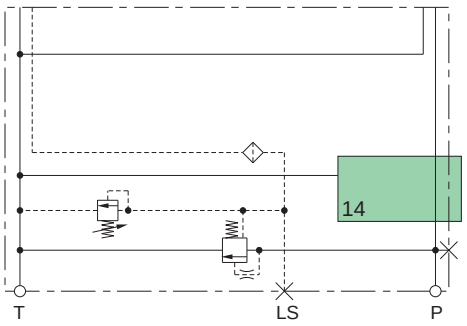

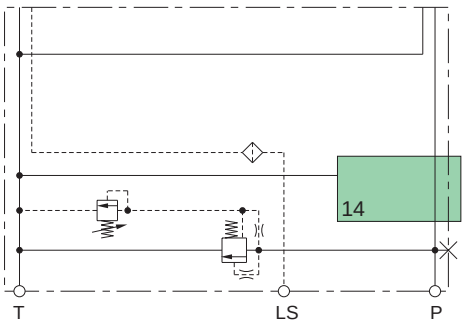

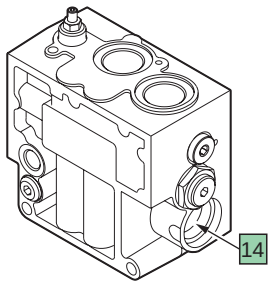

Open center circuit for fixed displacement pumps

Code	
BSPP	UN - UNF
HSE0004101030	HSE0004101040

Closed center circuit for load sensing pumps

Code	
BSPP	UN - UNF
HSE0004101161	HSE0004101162

14 15 *Seats, see accessories tables page B-37.*

(*) LP = Pilot pressure oil supply. If not specified 22 bar [319 psi]

For electrically activated valves.
With pilot oil supply. Prearranged for pump unloading valve, HSER

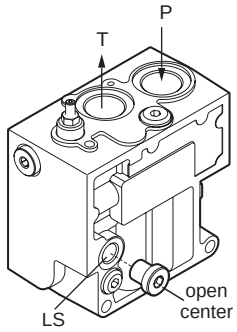

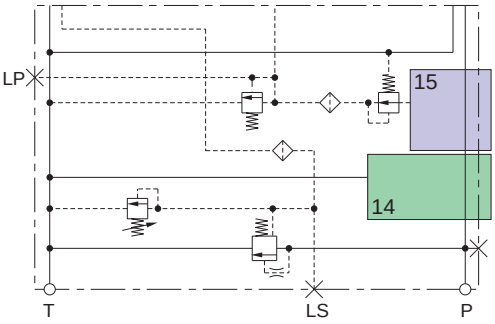

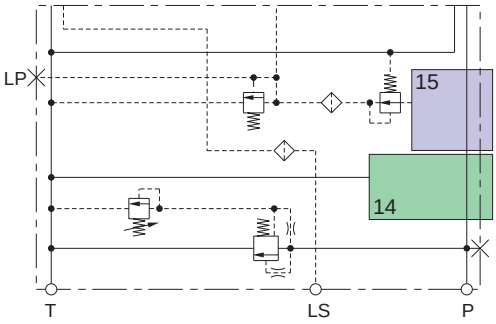

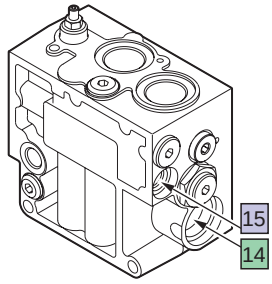

Open center circuit for fixed displacement pumps

Code		LP(*)	
BSPP	UN - UNF	bar	psi
HSE0004101090	HSE0004101100	22	319
HSE0004101243	*	30	435
HSE0004101244	*	36	522

Closed center circuit for load sensing pumps

Code		LP(*)	
BSPP	UN - UNF	bar	psi
HSE0004101163	HSE0004101164	22	319
HSE0004101259	HSE0004101262	30	435
HSE0004101260	HSE0004101264	36	522

** available on request*

For electrically activated valves. With pilot oil supply.
Prearranged for valves CRP04HP, HSET, HSEA

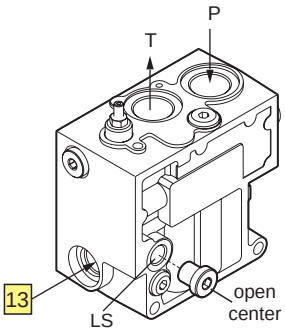

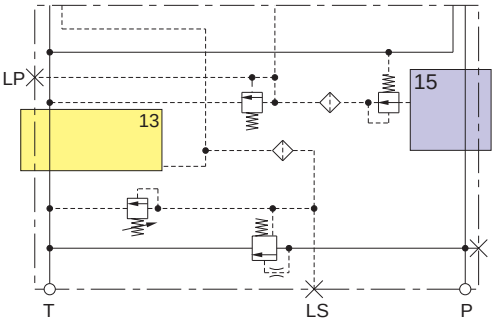

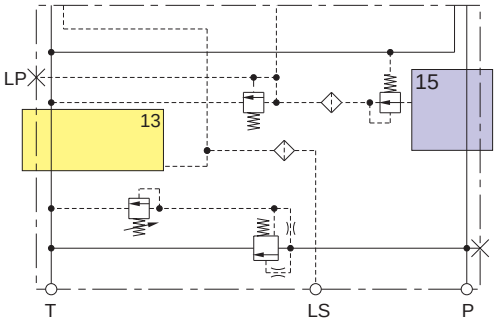

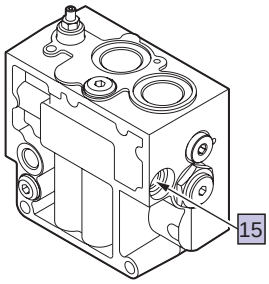

Open center circuit for fixed displacement pumps

Code		LP(*)	
BSPP	UN - UNF	bar	psi
HSE0004101070	HSE0004101080	22	319
HSE0004101233	HSE0004101241	30	435
HSE0004101234	HSE0004101242	36	522

Closed center circuit for load sensing pumps

Code		LP(*)	
BSPP	UN - UNF	bar	psi
HSE0004101150	HSE0004101160	22	319
HSE0004101255	HSE0004101257	30	435
HSE0004101256	HSE0004101258	36	522

13 14 15 *Seats, see accessories tables from page B-35.*

(*) LP = Pilot pressure oil supply. If not specified 22 bar [319 psi]

HSE inlet sections

For electrically activated valves. With pilot oil supply.
Prearranged for HSER and CRP04HP / HSEA / HSET.

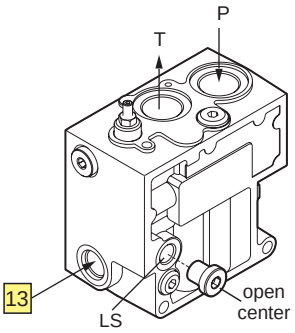

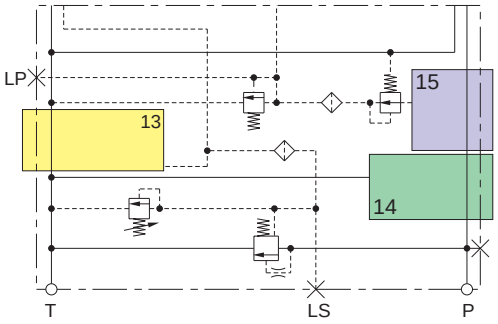

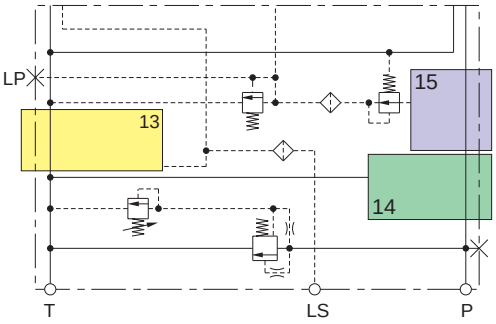

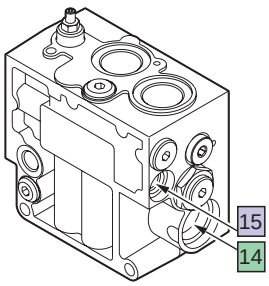

Open center circuit for fixed displacement pumps

Code		LP(*)	
BSPP	UN - UNF	bar	psi
HSE0004101000	HSE0004101001	22	319
HSE0004101225	HSE0004101227	30	435
HSE0004101226	HSE0004101228	36	522

Closed center circuit for load sensing pumps

Code		LP(*)	
BSPP	UN - UNF	bar	psi
HSE0004101125	HSE0004101126	22	319
HSE0004101247	HSE0004101249	30	435
HSE0004101248	HSE0004101250	36	522

For electrically activated valves.
With pilot oil supply. For system with 2 inlet sections supplied by 1 pump only.

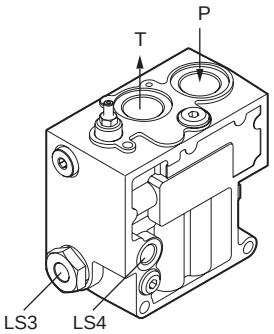

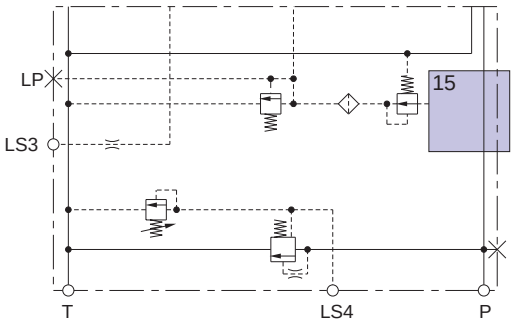

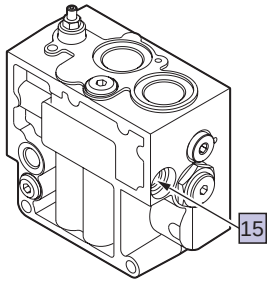

Open center circuit for fixed displacement pumps

Code		LP(*)	
BSPP	UN - UNF	bar	psi
HSE0004101071	HSE0004101072	22	319
HSE0004101235	HSE0004101237	30	435
HSE0004101236	HSE0004101238	36	522

13 14 15 *Seats, see accessories tables from page B-35.*

(*) LP = Pilot pressure oil supply. If not specified 22 bar [319 psi]

For electrically activated valves.
With pilot oil supply. For system with 2 inlet sections supplied by 1 pump only.
Prearranged for HSER.

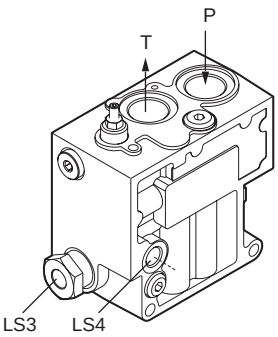

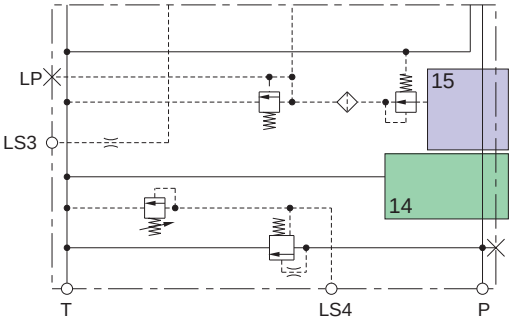

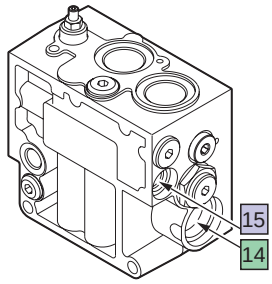

Open center circuit for fixed displacement pumps

Code		LP(*)	
BSPP	**UN - UNF**	bar	psi
HSE0004101073	**HSE0004101074**	22	319
*	**HSE0004101239**	30	435
*	**HSE0004101240**	36	522

** available on request*

For electrically activated valves. With pilot oil supply.
Prearranged for HSER and HSEVX. ATEX version.

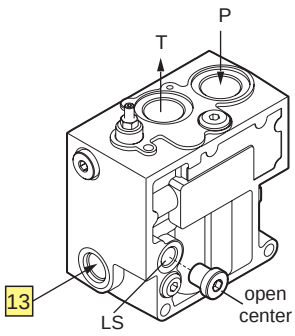

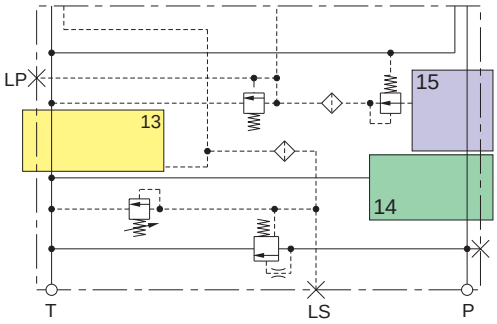

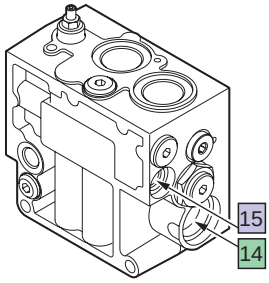

Open center circuit for fixed displacement pumps

Code BSPP	LP(*)	
	bar	psi
HSE0004101275	22	319

13 *: can be assembled only with the electrical valves ATEX type HSEVX.*

13 14 15 *Seats, see accessories tables from page B-35.*

(*) LP = Pilot pressure oil supply. If not specified 22 bar [319 psi]

HSE inlet sections

HSE inlet module overall dimensions

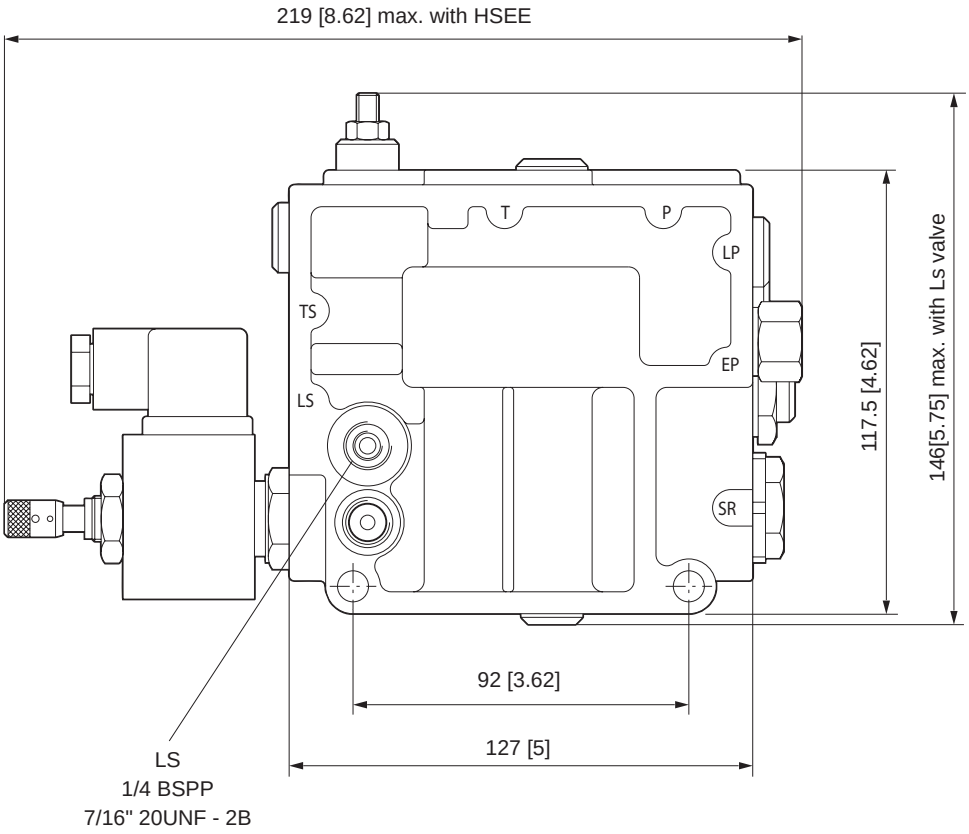

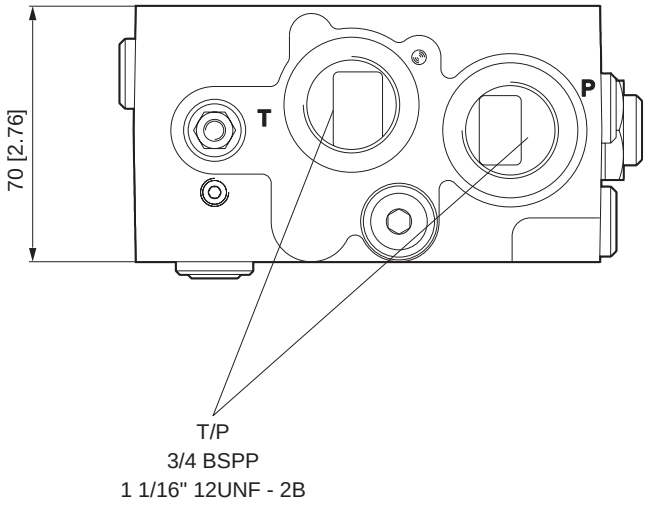

mm [inch]

Technical data

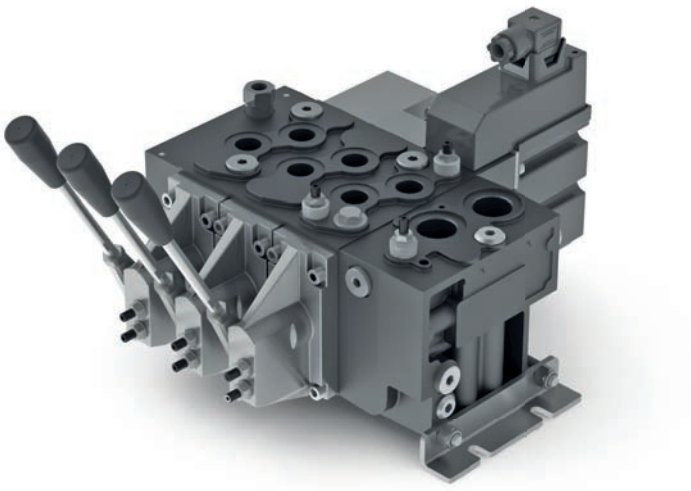

General features

The HPV proportional valves are proportional directional valves with two functional characteristics:

- Directional regulation.
- Flow regulation insensitive to the variation of the load applied to the actuator.

They can be remotely controlled and represent the most advanced technology in the world of applied hydraulics.

Proportional distributors differ in “open center” and “closed center”:

- Proportional open center distributors are used with fixed displacement pumps.
- The closed center proportional valves are used with variable displacement pumps with load sensing control.

Hydraulic features

The hydraulic features reported below were measured using a mineral based hydraulic oil according to DIN 51524 or ISO 6743/4 with a viscosity of 25 mm²/s [130 SUS] at a temperature of 50 °C [122 °F]

Rated flow	HSE inlet section, P port		160 l/min	42 US gpm
	Mid inlet section, HFLS		250 l/min	66 US gpm
	A, B ports with pressure compensator		130 l/min	34 US gpm
	A, B ports without pressure compensator		140 l/min	37 US gpm
Max. working pressure	Connection P / P port	Pressure relief valve setting	400 bar	5800 psi
		Working pressure	370 bar	5370 psi
	Ports A, B		370 bar	5370 psi
	Connection Y		to tank	
	Connection T	Static	25 bar	363 psi
		Dynamic	35 bar	508 psi
Max. pilot pressure oil supply			18 ÷ 22 bar	260 ÷ 320 psi
Oil temperature	Recommended		-30 ÷ 60 °C	-22 ÷ +140 °F
	Min.		-25 °C	-13 °F
	Max.		+80 °C	+176 °F
Ambient temperature			-30 ÷ 60 °C	-22 ÷ +140 °F
Viscosiy	Recommended		12 ÷ 80 mm²/s (cSt)	
	Min.		4 mm²/s (cSt)	
	Max.		460 mm²/s (cSt)	
Filtering	Max. contamination: class 9 according to NAS 1638 (20/18/15 according to ISO 4406)			
Stroke	Spool stroke		± 7 mm	± 0.276 in
	Proportional		± 5.5 mm	± 0.217 in
Dead band			± 1.5 mm	± 0.059 in
Nominal internal leakage at 180 bar (2611 psi)	A, B → T	Without anti-shock valves	23 cm³/min	1.40 in³/min
		With anti-shock valves	29 cm³/min	1.77 in³/min

HPV 41 internal (easy replacement) filters, mesh 100 µm.
Mineral oil hydraulic fluid: according to DIN 51524 and 51525 or ISO 6743/4. HPV 41 can also be used with phosphorous esters (HFDR), water-glycol /HFC) or water-oil (HFB) mixes, subject to our Technical Dept. approval.

Hydraulic control - MHPH module			
Pilot pressure	Start	4.5 bar	65 psi
	End stroke	15 bar	218 psi
Max. pilot pressure		30 bar	436 psi

Technical data

Characteristic curves

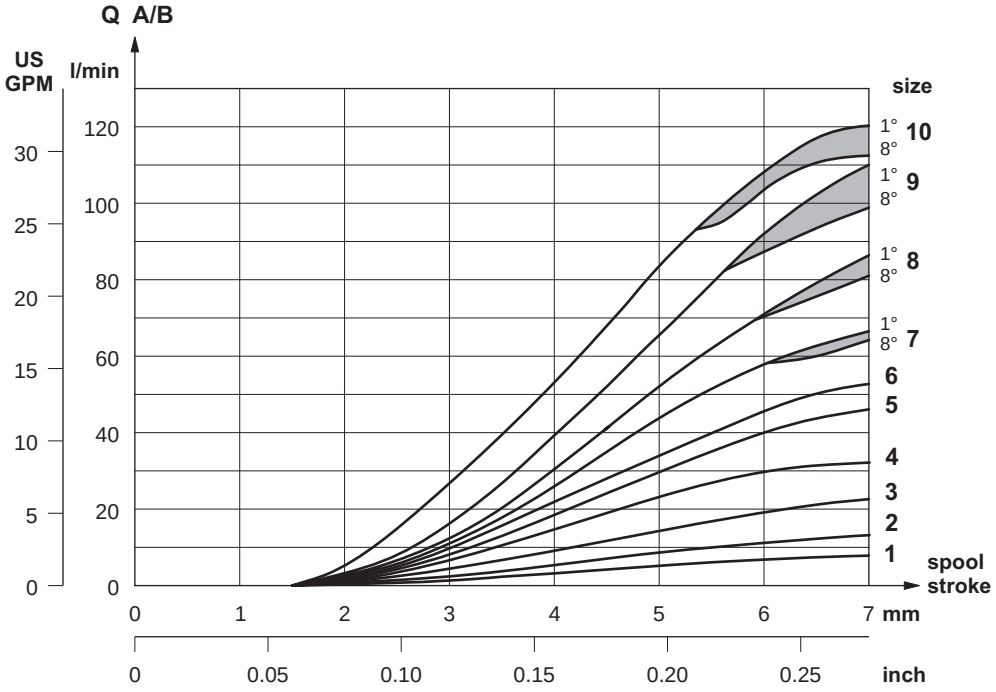

Flow characteristics of section with compensator from 1st to 8th section with open or closed centre type inlet section

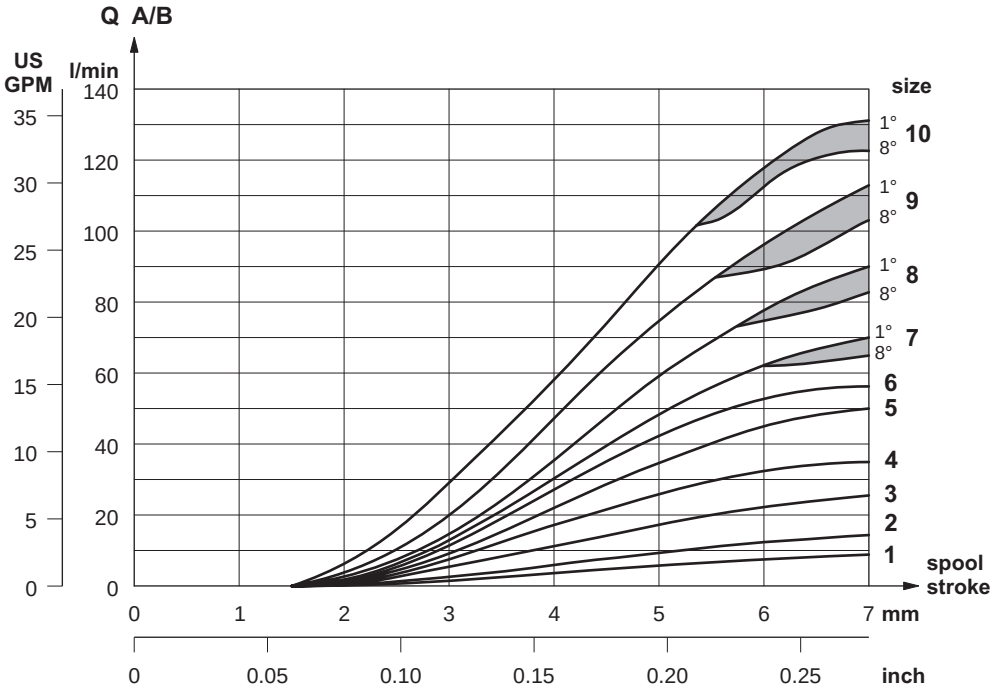

Flow characteristics of section without compensator from 1st to 8th section with open centre type inlet section

Curves measured with oil viscosity of 25 mm²/s (cSt) at a temperature of 50 °C [122 °F]