GROUP 2 PUMPS

CONSTRUCTIVE CHARACTERISTICS:

PART	*MATERIAL*	*CHARACTERISTICS*
GEARS	**Hardened steel UNI 7846**	**Rs= 1250 N/mm²** **Rm= 1450 N/mm²**
FLANCE AND COVER	**G25 / G30 cast iron**	**Rs= 300 N/mm²** **Rm= 450 N/mm²**
BEARINGS	**Avional** **Bearings with DU**	**Rs= 350 N/mm²** **Rm= 390 N/mm²**
BODY	**Etruded in aluminium alloy** **Series 7020**	**Rs= 350 N/mm²** **Rm= 390 N/mm²**
O-RINGS	**Buna N** **Viton**	**90 Shore, up to 90°C** **80 Shore, for high temperature**
ANTIEXTRUSION	**Zitel**	**With glass fibres**

Rs= Enervation load
Rm= Breaking load

GENERAL CHARACTERISTICS:

Maximum pressures up to 300 bar.
Weight : from 3.1 Kg to 4.3 kg
Maximum speed up to 4.000 rpm.
Type of shafts: **Taper 1:8 and 1:5**
Oldham
Slined DIN 5482 17x14.
SAE A splined-9 TEETH
SAE A cylindrical - Ø15.85 - SAE A 11 TEETH
Type of flanges: **European standard**
German standard
SAE A standard.

Displacements from 4 cc/rev to 30cc/rev.
The displacements are available according this table:

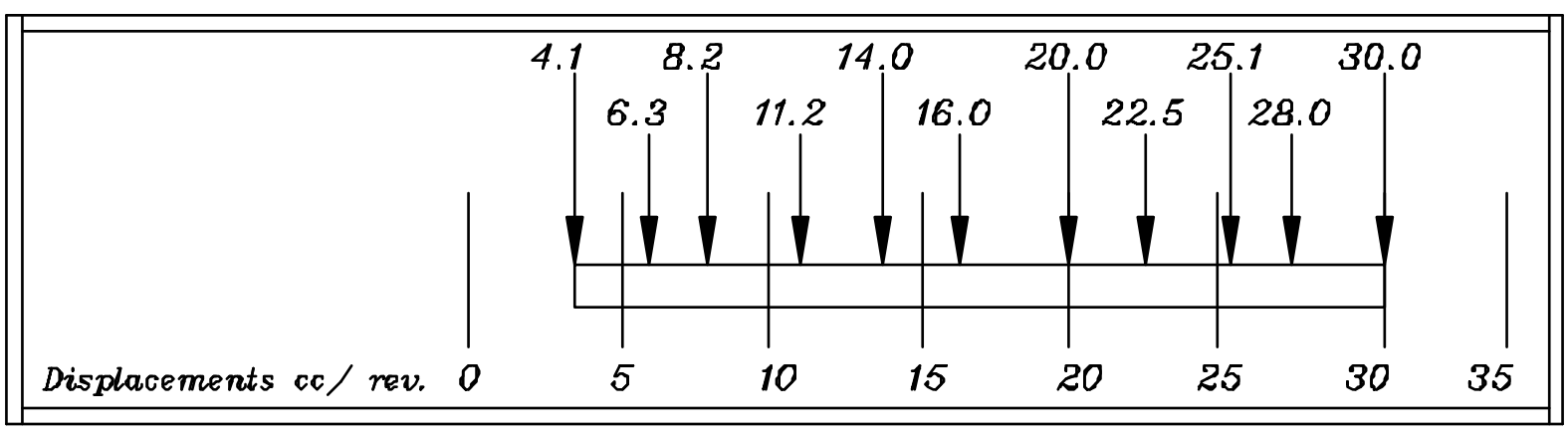

There is also available a special version with built-in support.

DRIVE:

The connection of the pump to the motor must be done preferably with the use of a flexible coupling to avoid any radial and/or axial force on the shaft, otherwise pump efficiency will dramatically drop due to early wear of inner moving parts.
In any applications where the motion is trasmitted through belts, it is necessary to use a support to avoid any radial or axial load to the pump shaft.
In any applications where are used splined shafts ot Oldham couplings, it is suggested to assure a costant lubrification through grease or similar products.

GROUP 2 PUMPS

WORKING CONDITIONS- LIMIT PERFORMANCES

In normal working conditions there must be, in the suction pipe, a pressure lower than the atmospheric pressure.

The pressure range in suction must be:

Min. 0.75 bar (absolute)	MAX 2,0 bar (absolute)

The maximun pressure values "P1" are referred to a continuous working at 1500 rpm with standard hydraulic fluids with minimum viscosity of 10 cSt.
For heavier working conditions (viscosity or high temperature) it is necessary to reduce the "P1" values.

In the following table are described the admitted pressures:

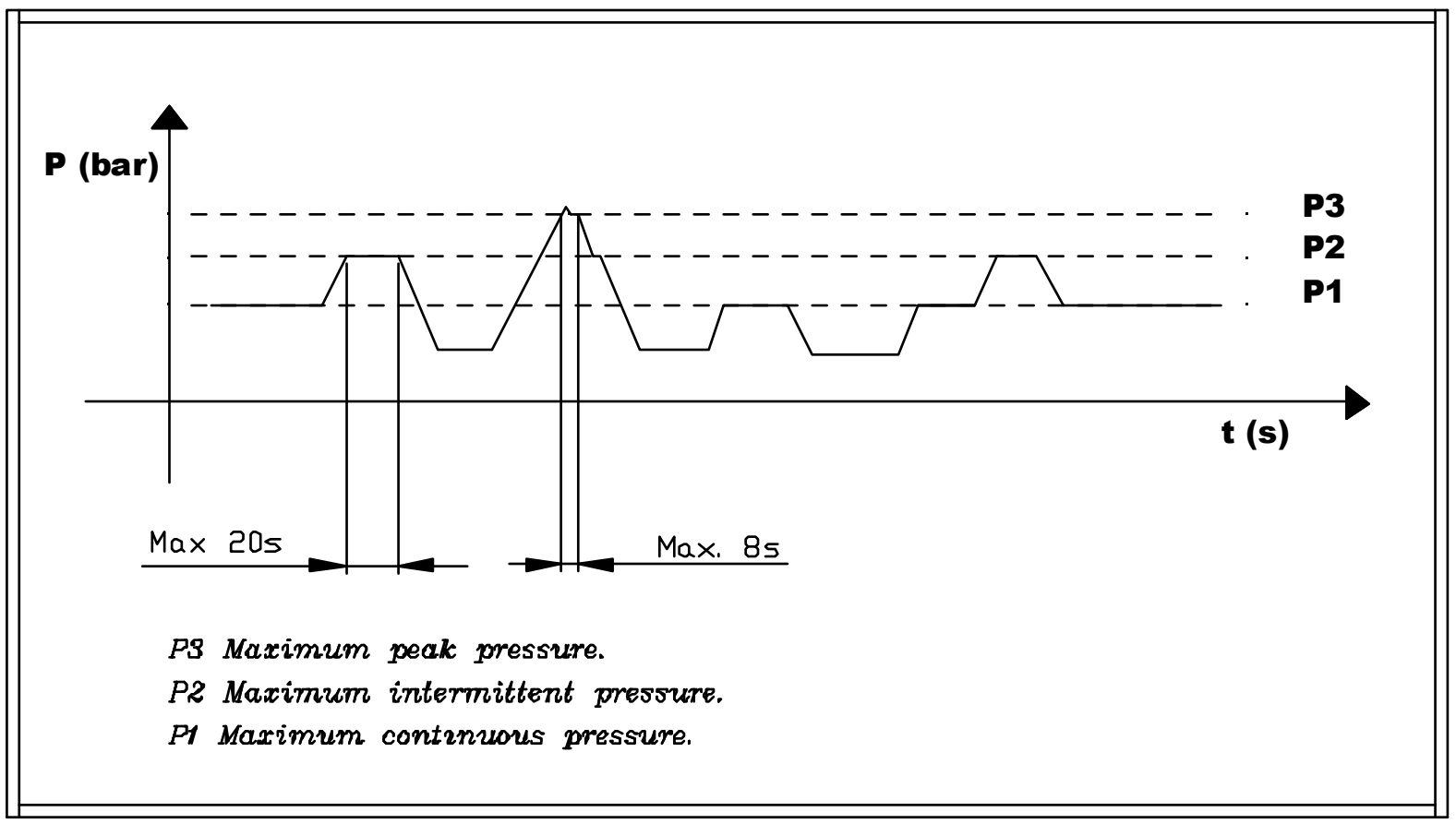

The standard working speeds (minimum and maximum) are the following:

Min. = 400 rpm	Max = (See following table)

DIRECTION OF ROTATION LOOKING AT THE SHAFT:

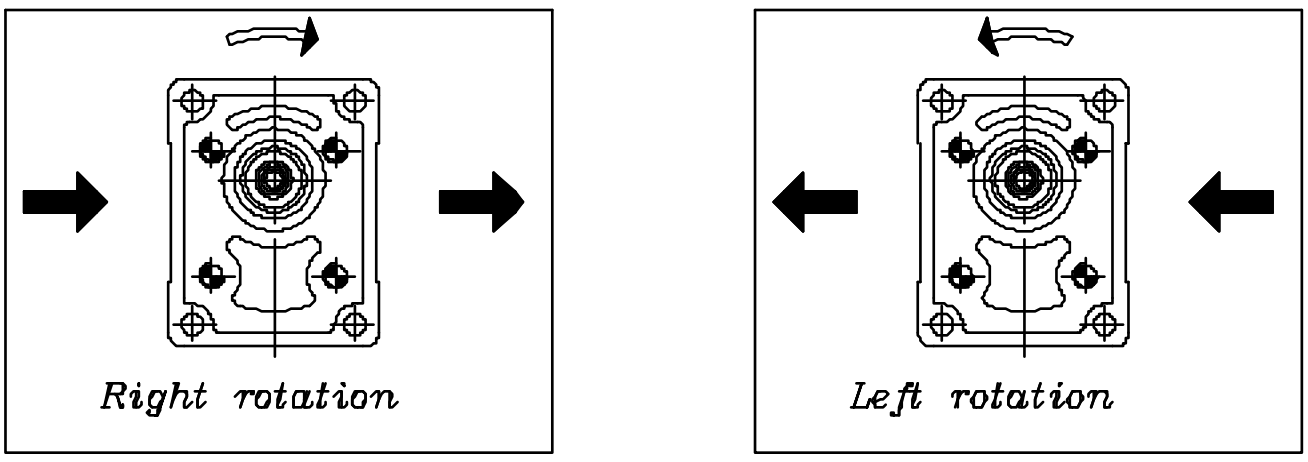

DANA HYDR-APP™

GROUP 2 REVERSIBLE PUMPS AND MOTORS

GENERAL DATA

	Displacem. (cc/rev)	Max working pressure P1 (bar)	Peak pressure P3 (bar)	Max speed (rpm)	Dimension A (mm)	Dimension B (mm)
OT 200 P04	04,10	210	240	4000	40,00	83,50
OT 200 P06	06,20	220	255	3500	41,50	86,50
OT 200 P08	08,20	220	255	3500	43,00	89,50
OT 200 P11	11,20	220	255	3500	45,15	93,80
OT 200 P14	14,00	220	255	3000	47,15	97,80
OT 200 P16	16,00	220	255	3000	48,60	100,7
OT 200 P20	20,00	200	240	3000	51,50	106,5
OT 200 P22	22,50	170	210	2500	57,35	118,2
OT 200 P25	25,10	170	180	2500	59,25	122,0
OT 200 P28	28,00	140	180	2500	61,35	126,2
OT 200 P30	30,00	130	170	2000	62,75	129,0

EFFICIENCIES

$\eta_v = \eta_v\ (V, \Delta p, n)$	**Minimal volumetric efficiency**	**≈ 0.85**
$\eta_m = \eta_m\ (V, \Delta p, n)$	**Mechanical efficiency**	**≈ 0.9**
$\eta_t = \eta_v \times \eta_m$	**Overall efficiency**	**≈ 0.8**

GROUP2 MOTORS - TORQUE CHARACTERISTICS CURVE

MOTORS OT200 M20

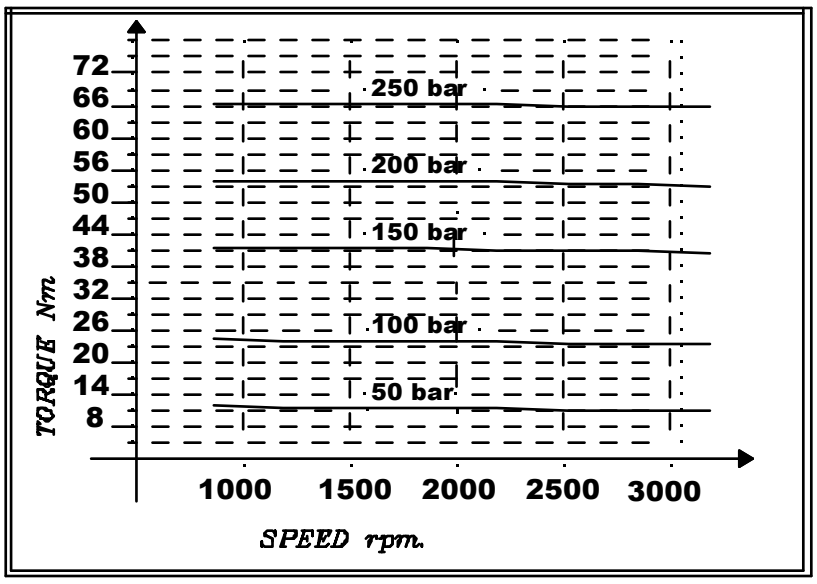

MOTORS OT200 M22

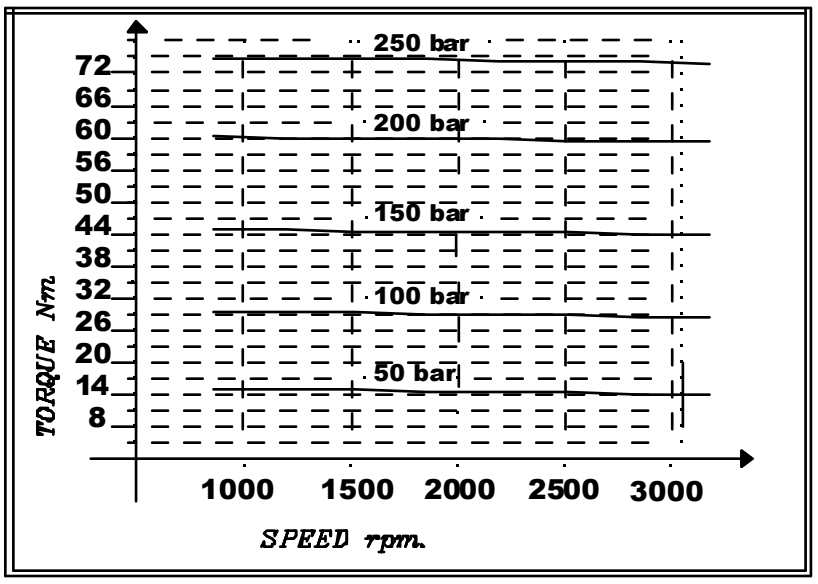

MOTORS OT200 M25

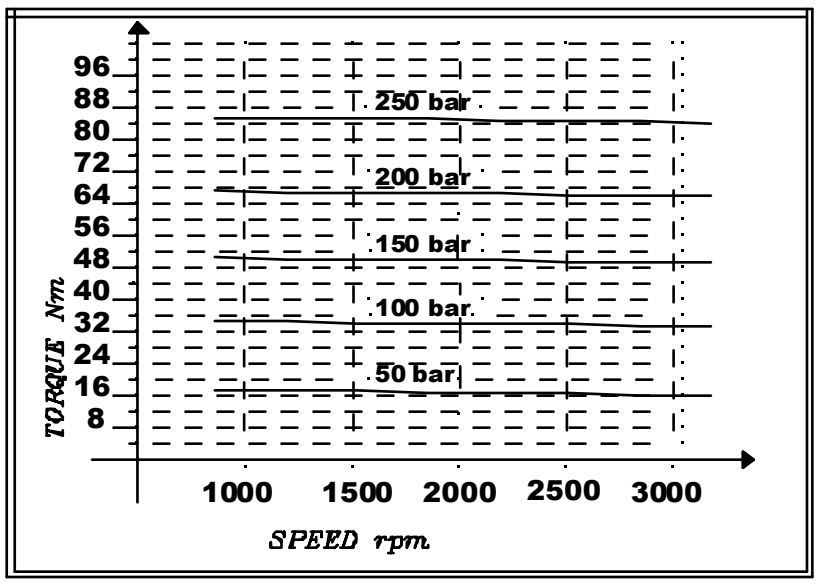

MOTORS OT200 M28

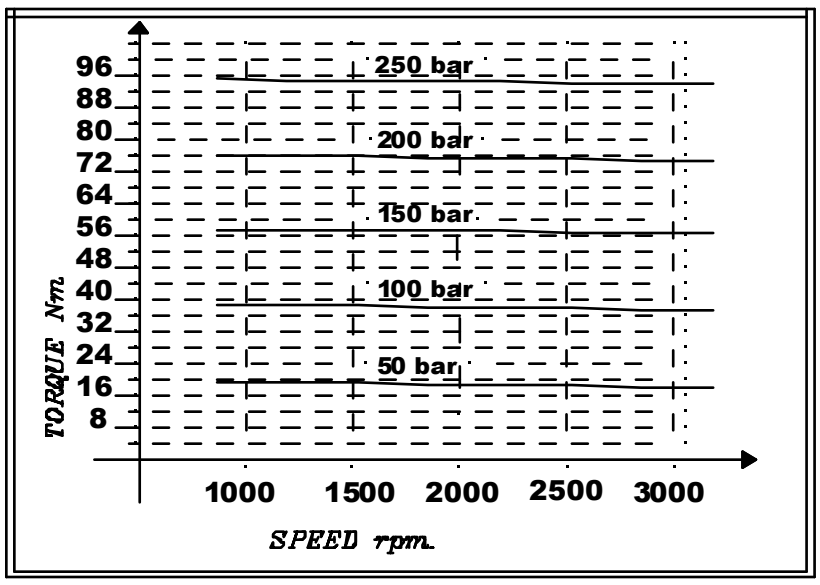

MOTORS OT200 M30

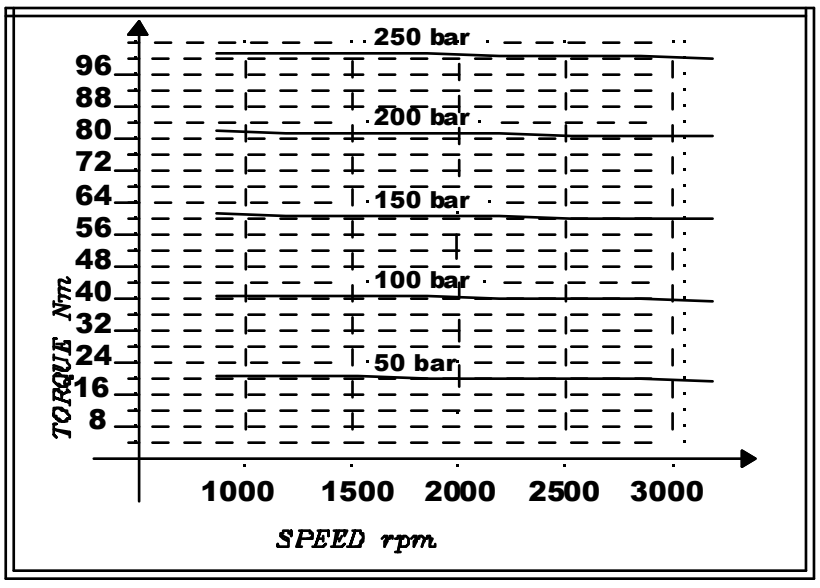

GROUP 2 PUMPS- EUROPEAN STANDARD

VERSION: P28 P2

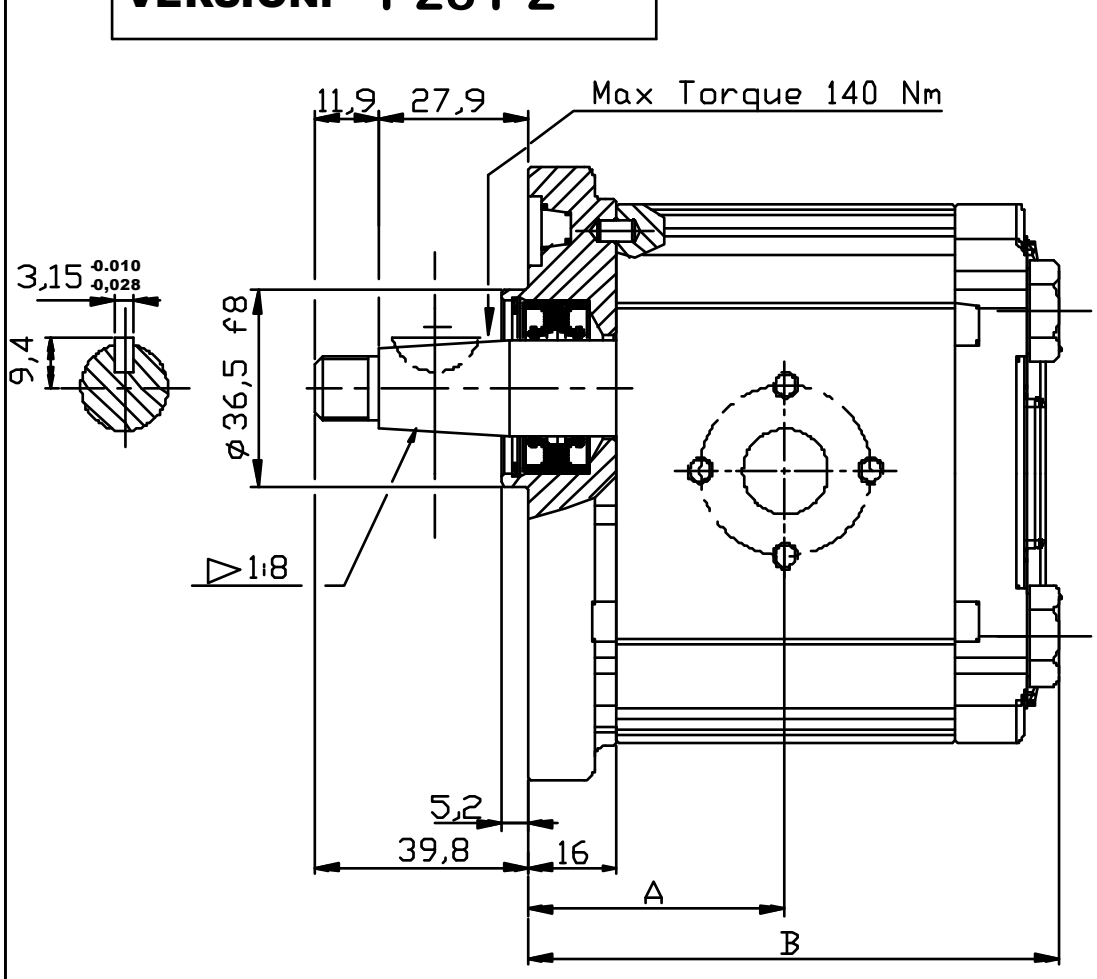

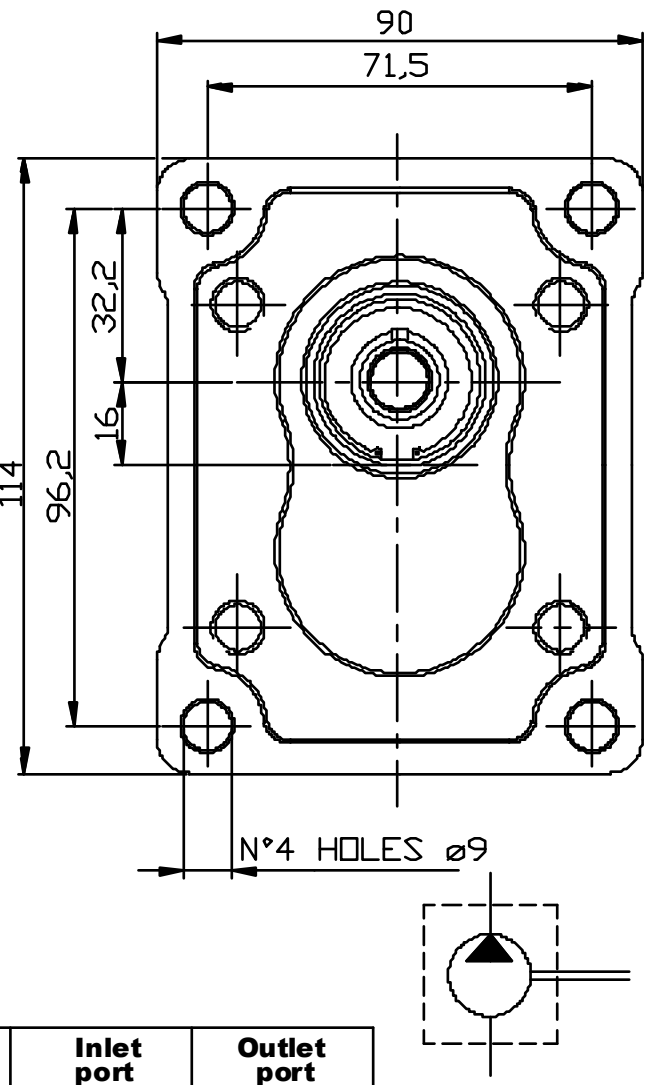

Type	Displacement (cc/rev)	Max working pressure P1 (bar)	Peak pressure P3 (bar)	Max speed (r.p.m)	Dimension A (mm)	Dimension B (mm)	Inlet port ØD	Inlet port ØA	Inlet port W	Outlet port ØD	Outlet port ØA	Outlet port W
OT 200 P04	04,10	250	300	4000	40,00	83,50	13	30	M6	13	30	M6
OT 200 P06	06,20	250	300	3500	41,50	86,50	13	30	M6	13	30	M6
OT 200 P08	08,20	250	300	3500	43,00	89,50	13	30	M6	13	30	M6
OT 200 P11	11,20	250	300	3500	45,15	93,80	13	30	M6	13	30	M6
OT 200 P14	14,00	240	300	3000	47,15	97,80	20	40	M8	13	30	M6
OT 200 P16	16,00	240	300	3000	48,60	100,7	20	40	M8	13	30	M6
OT 200 P20	20,00	200	240	3000	51,50	106,5	20	40	M8	13	30	M6
OT 200 P22	22,50	170	210	2500	57,35	118,2	20	40	M8	13	30	M6
OT 200 P25	25,10	170	210	2500	59,25	122,0	20	40	M8	13	30	M6
OT 200 P28	28,00	140	180	2500	61,35	126,2	20	40	M8	13	30	M6
OT 200 P30	30,00	130	170	2000	62,75	129,0	20	40	M8	13	30	M6

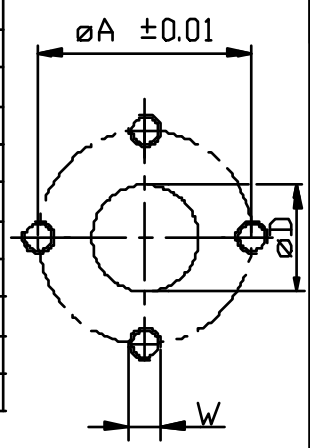

EXAMPLE OF ORDERING CODE

OT200 P 08 S / P 28 P2

- OT200 — Series
- P — Pump
- 08 — Displacement (see above table)
- S — Rotation: S Anti-clockwise; D Clockwise
- P — Body for European flanges
- 28 — Taper shaft (1:8)
- P2 — European standard flange

GROUP 2 REVERSIBLE PUMPS AND MOTORS

DRIVE SHAFTS

SHAFT CODE 28

Max torque 140 Nm

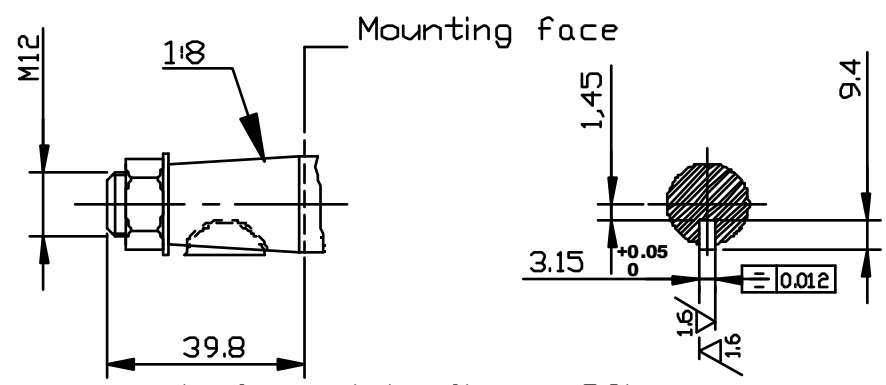

SHAFT CODE 25

Max torque 140 Nm

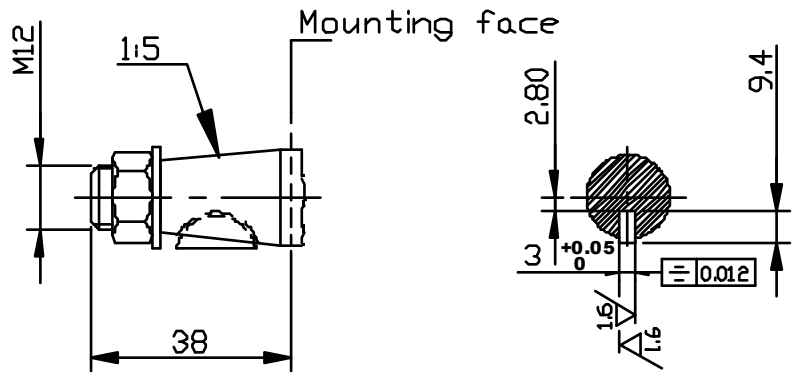

SHAFT CODE 21

Max torque 100 Nm

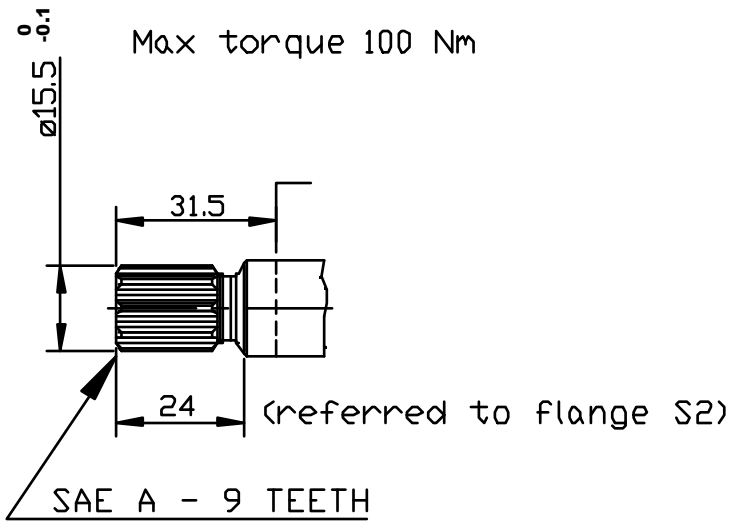

SHAFT CODE 20

Max torque 170 Nm

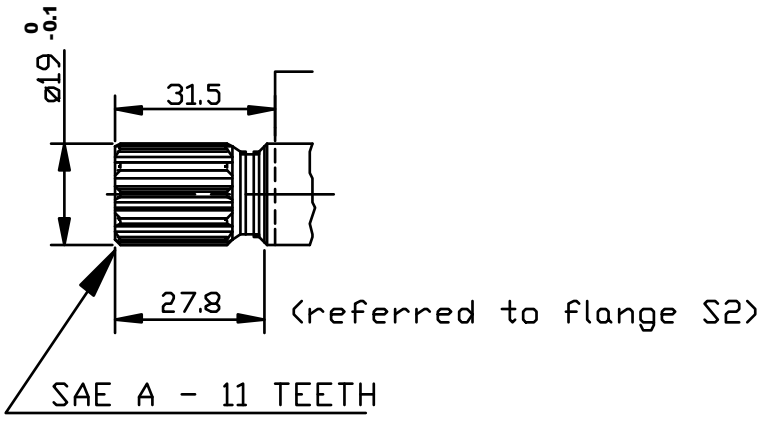

SHAFT CODE 31

Max torque 70 Nm

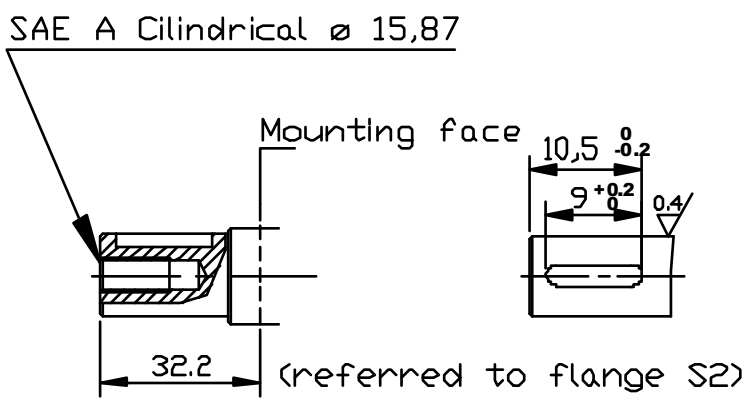

SHAFT CODE 23

Max Torque 110 Nm

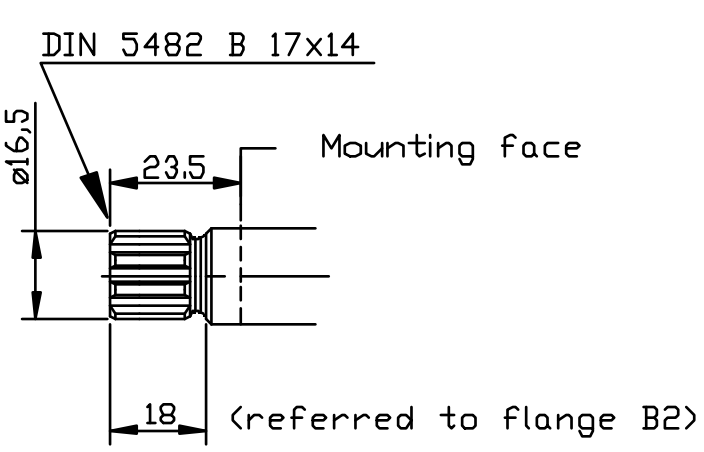

SHAFT CODE 24

Max torque 70 Nm

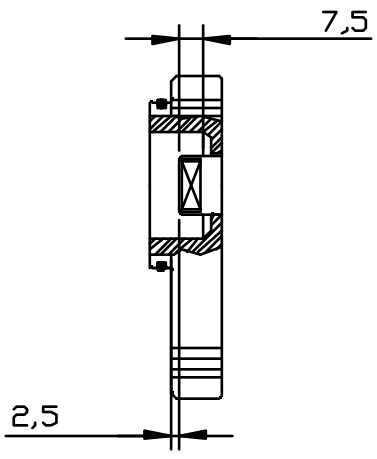

GROUP 2 REVERSIBLE PUMPS AND MOTORS

MOUNTING FLANGES

EUROPEAN STANDARD CODE P2

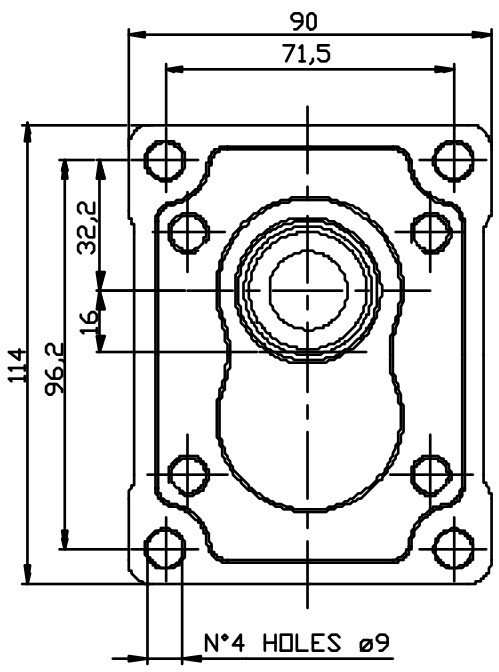

GERMAN STANDARD CODE B2

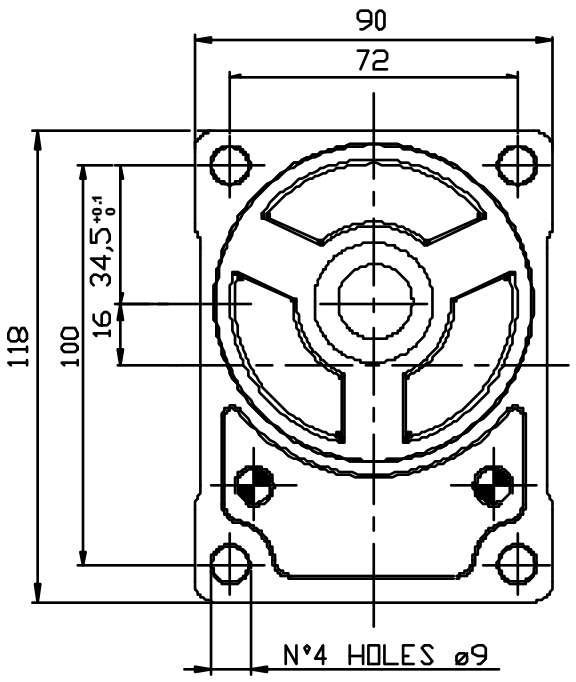

GERMAN STANDARD CODE B4

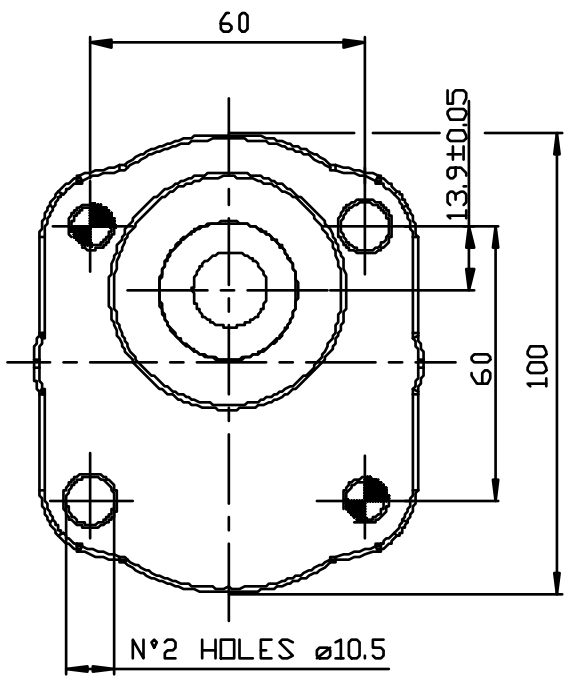

GERMAN STANDARD CODE B5

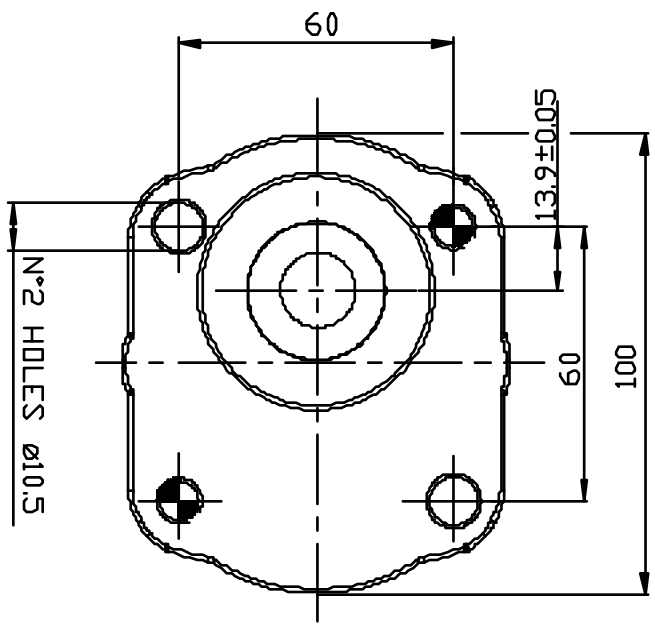

GROUP 2 REVERSIBLE PUMPS AND MOTORS

PORT SIZES

CODE B

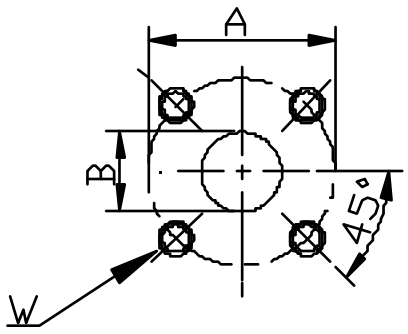

Quote	Dimension left side	Dimension right side
A	Ø40	Ø35
B	Ø20	
W	M6	

CODE P

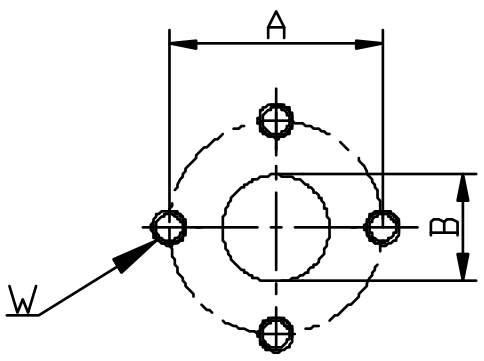

Quote	Displacement from 04 to 11 (mm)	Displacement from 14 to 30 (mm)
A	Ø30	Ø40
B	Ø13	Ø20
W	M6	M8

CODE R

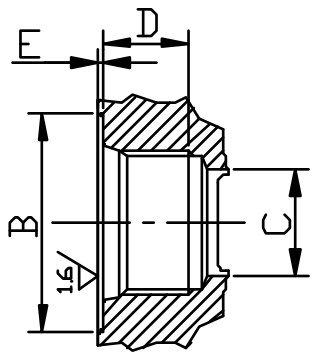

Quote	SAE 10 from 04 to 11 (mm)	SAE 12 from 14 to 30 (mm)
C	Ø13	Ø20
E	0.8	0.5
D	14	16
B	7/8-14 UNF	1-1/16 UNF

CODE G

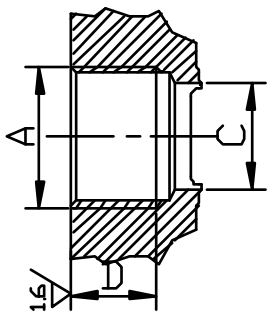

Quote	Displacement from 04 to 11 (mm)	Displacement from 14 to 30 (mm)
A	1/2"	3/4"
C	Ø13	Ø20
D	14	16

GROUP 2 REVERSIBLE PUMPS AND MOTORS

EXAMPLE OF ORDERING CODE

OT200 P 08 R / P 28 P2

Series	
P	Pump
M	Motor

Rotation	
R	Reversible

	Displacement (cc/rev)
04	04,10
06	06,20
08	08,20
11	11,20
14	14,00
16	16,00
20	20,00
22	22,50
25	25,10
28	28,00
30	30,00

Flange	
P2	European standard
B2	German standard
B4	German standard
B5	German standard
B6	German standard
B7	German standard
S2	SAE A standard

Shaft	
28	Taper shaft 1:8
25	Taper shaft 1:5
21	SAE A 9 Teeth
20	SAE A 11 Teeth
31	SAE A Cilindrical Ø15.87
23	DIN 5482 B 17x14
24	Tang shaft

Ports	
B	Body with flanged ports
P	Body with flanged ports
R	Body with O-Ring Boss ports
G	Body with threated ports (BSP)